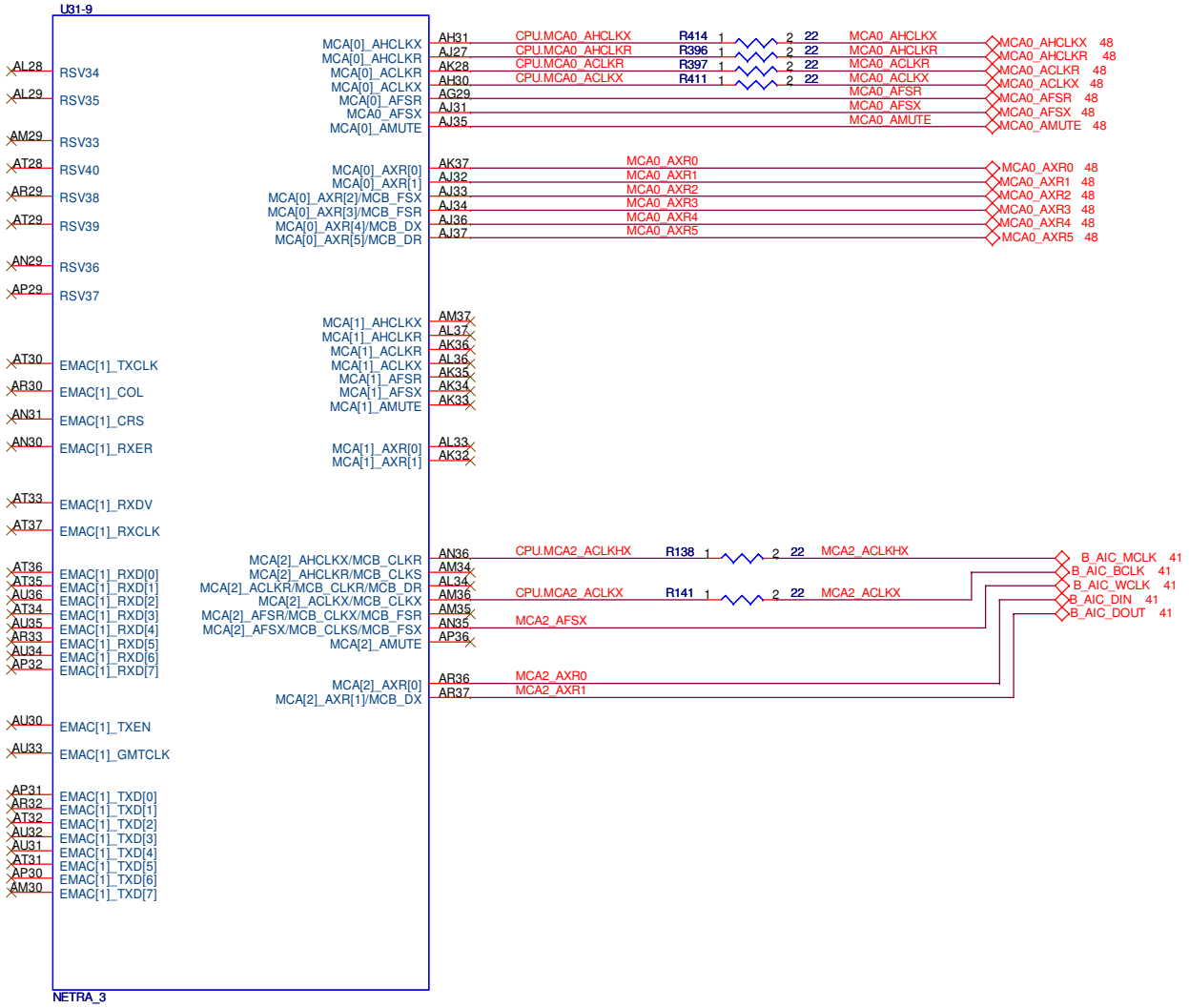


```
MCLK: MCA2_AHCLKX (drive this clock into McASP)
BCLK: MCA2_ACLKX (McASP will drive this into the AIC)
WCLK: MCA2A_FSX (McASP will drive this into the AIC)
DIN: MCA2_AXR[0]
DOUT: MCA2_AXR1[1]
Drive the MCLK into McASP1 Tx.
McASP generates the Tx bit and frame clocks.
Configure McASP such that the Rx section
operates off of the Tx section clocks.
```

EVM_3V3

EVM_3V3 3,5,6,11,13,14,15,18,28,29,31,32,33,34,35,36,37,38,39,40,41,42,43,44,46,48,49,50,51,53,54,55,56

POWER DOMAINS

EVM_12V0	12 VOLT INPUT FROM EXTERNAL POWER SUPPLY
EVM_5V0	5.0 VOLT OUTPUT FROM TPS65232
EVM_3V3	3.3 VOLT OUTPUT FROM TPS65232
EVM_1V8_A	1.8 VOLT ANALOG LDO OUTPUT FROM TPS65001
EVM_1V8_D	1.8 VOLT DIGITAL OUTPUT FROM TPS65001
EVM_1V5	1.5 VOLT OUTPUT FROM TPS54620
EVM_1V0_AVS	1.0 VOLT CORE FROM TPS40041
EVM_1V0_CONN	1.0 VOLT NON-CORE FROM TPS65232
EVM_0V9	0.9 VOLT OUTPUT FROM TPS65001
EVM_DDR_VTT	0.75 VOLT TERMINATOR DDR3

REV	DESCRIPTION	DATE	APPROVED
A	Initial schematic for layout	02/15/2010	RRP
B	Beta build	10/31/2010	RRP
B	Production build	5/15/2011	RRP

SCHEMATIC CONTENTS

01) TITLE PAGE
02) NETRA MCASP'S
03) NETRA SERIAL I/O
04) NETRA ETHERNET INTERFACE
05) NETRA USB INTERFACE
06) NETRA GPMC
07) NETRA DDR0 EMIF
08) NETRA DDR1 EMIF
09) NETRA ANALOG VIDEO
10) NETRA VIDEO PORT
11) NETRA HDMI INTERFACE
12) NETRA SATA/PCIe
13) SERDES CLOCKS
14) NETRA JTAG
15) NETRA CLOCKS
16) NETRA POWER 1
17) NETRA POWER 2
18) NETRA POWER 3
19) NETRA GROUND PINS
20) CAPS
21) DDR3 EMIF0 MEMORIES
22) EMIF0 TESTPOINTS
23) DDR CAPS
24) DDR3 VTT TERMINATION
25) DDR3 EMIF1 MEMORIES
26) EMIF0 TESTPOINTS
27) DDR CAPS
28) PCIe INTERFACE CONNECTOR
29) PCIe 3V3 POWER
30) USB HOST INTERFACE CONNECTORS
31) I2C EEPROM
32) I2C EXPANDER
33) RS232 INTERFACE
34) IR RECIEVER
35) SD/MMC CONNECTOR
36) SPI EEPROM
37) NAND FLASH
38) ETHERNET PHY
39) ETHERNET POWER
40) ETHERNET CONNECTOR
41) AUDIO CODEC TLV320AIC3106
42) ANALOG VIDEO OUT
43) SCART ANALOG VIDEO OUT
44) VIDEO PORT EXPANSION
45) VIDEO PORT EXPANSION 2
46) GPMC EXPANSION CONNECTOR
47) SERIAL I/O EXPANSION CONNECTOR
48) MCASP EXPANSION CONNECTOR
49) POWER MONITORS
50) POWER MONITOR CPU
51) POWER 5V0,3V3,1V0_CONN
52) POWER 1V5
53) POWER VTT
54) POWER 1V0 CORE
55) POWER 0V9/1V8_A/1V8_D
56) POWER IN
57) POWER SEQUENCING
58) REVISION HISTORY

I2C0 ADDRESS MAP

BASE BINARY	HEX BASE (RJ)	DEVICE	SHEET
		PCF8575	27
		I2C EEPROM	31
		TLV320AIC3106	36

RJ - Right Justified

I2C1 ADDRESS MAP

BASE BINARY	HEX BASE (RJ)	DEVICE	SHEET
		PCF8575	27

RJ - Right Justified

REVISION STATUS OF SHEETS

REV	A	A	A	A	A	A	A	A		
SH	51	52	53	54	55	56	57	58		
REV	A	A	A	A	A	A	A	A	A	A
SH	41	42	43	44	45	46	47	48	49	50
REV	A	A	A	A	A	A	A	A	A	A
SH	31	32	33	34	35	36	37	38	39	40
REV	A	A	A	A	A	A	A	A	A	A
SH	21	22	23	24	25	26	27	28	29	30
REV	A	A	A	A	A	A	A	A	A	A
SH	11	12	13	14	15	16	17	18	19	20
REV	C	A	A	A	A	A	A	A	A	A
SH	1	2	3	4	5	6	7	8	9	10

NEXT ASSY	USED ON
APPLICATION	

		DATE
DWN	R.R.P.	02/15/2010
CHK	T.W.K.	02/15/2010
ENGR	R.R.P.	02/15/2010
ENGR-MGR	R.R.P.	02/15/2010
QA	C.M.D.	02/15/2010
MFG	R.R.P.	02/15/2010
RLSE	R.R.P.	02/15/2010

SPECTRUM DIGITAL INCORPORATED

Title: NETRA EVM

Page Contents: TITLE PAGE

Size: B | DWG NO 512872-0001 | Revision: C

Date: Tuesday, November 06, 2012 | Sheet 1 of 58

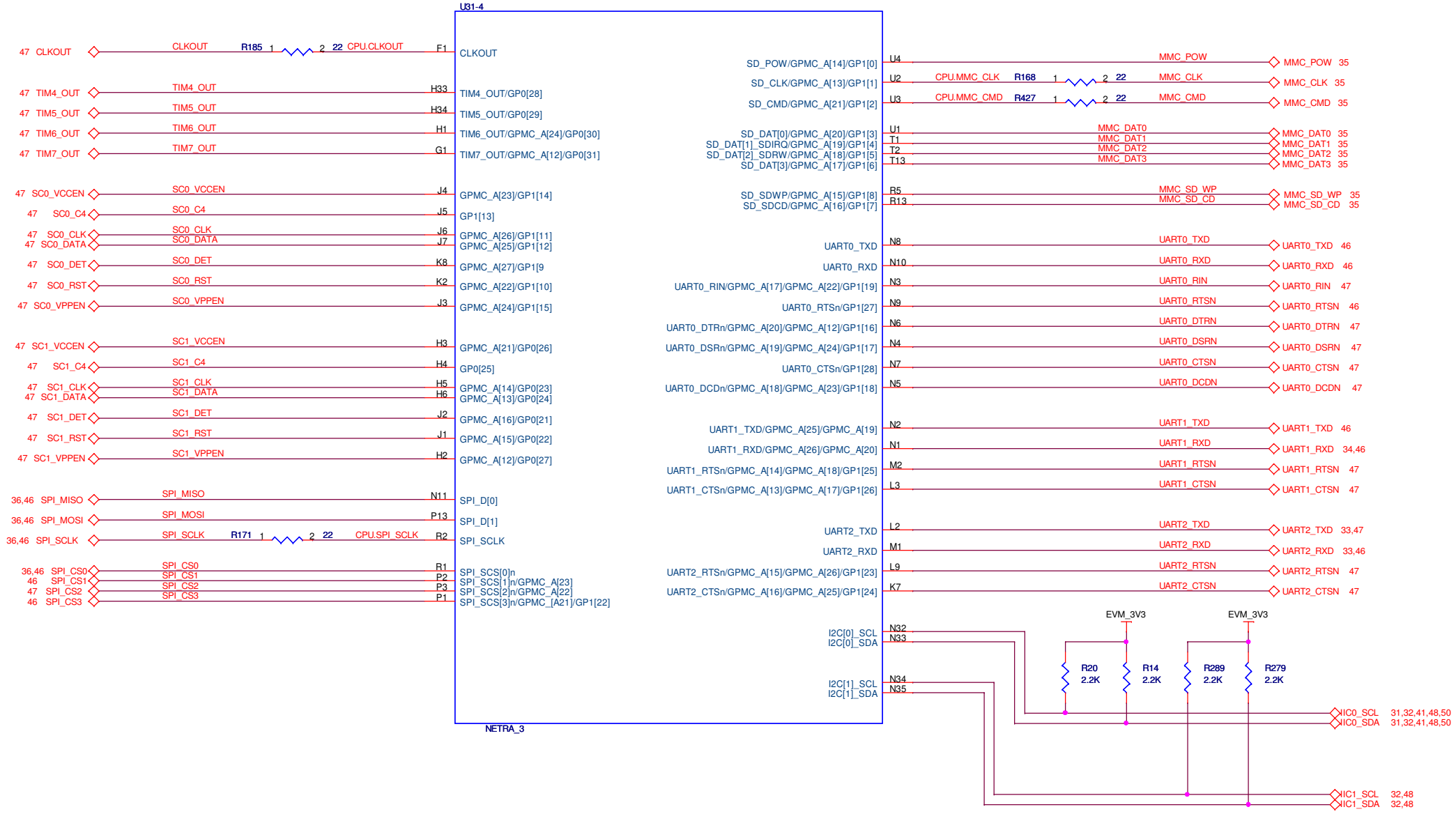

SPECTRUM DIGITAL INCORPORATED			
Title:	NETRA EVM		
Page Contents:	NETRA SERIAL I/O		
Size: B	DWG NO 512872-0001		Revision: A
Date: Tuesday, November 06, 2012		Sheet 3 of 58	

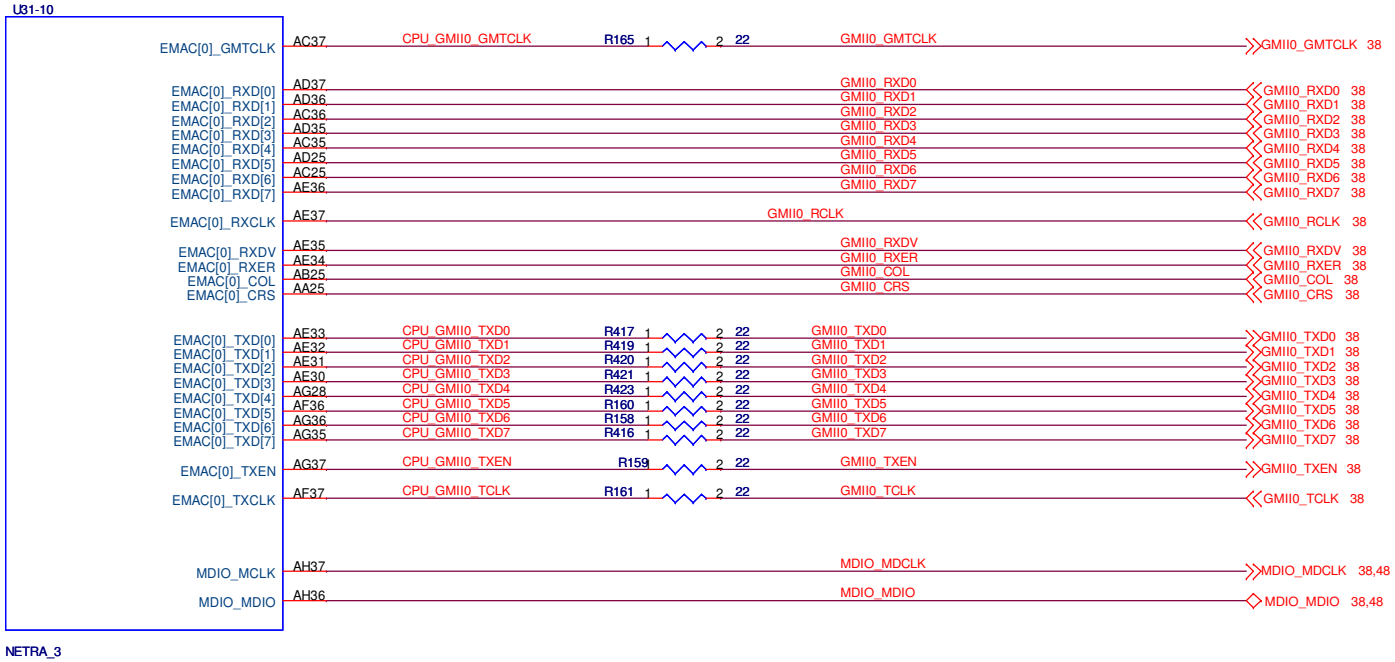

SPECTRUM DIGITAL INCORPORATED			
Title:	NETRA EVM		
Page Contents:	NETRA ETHERNET		
Size: B	DWG NO 512872-0001		Revision: A
Date:	Tuesday, November 06, 2012	Sheet 4 of 58	

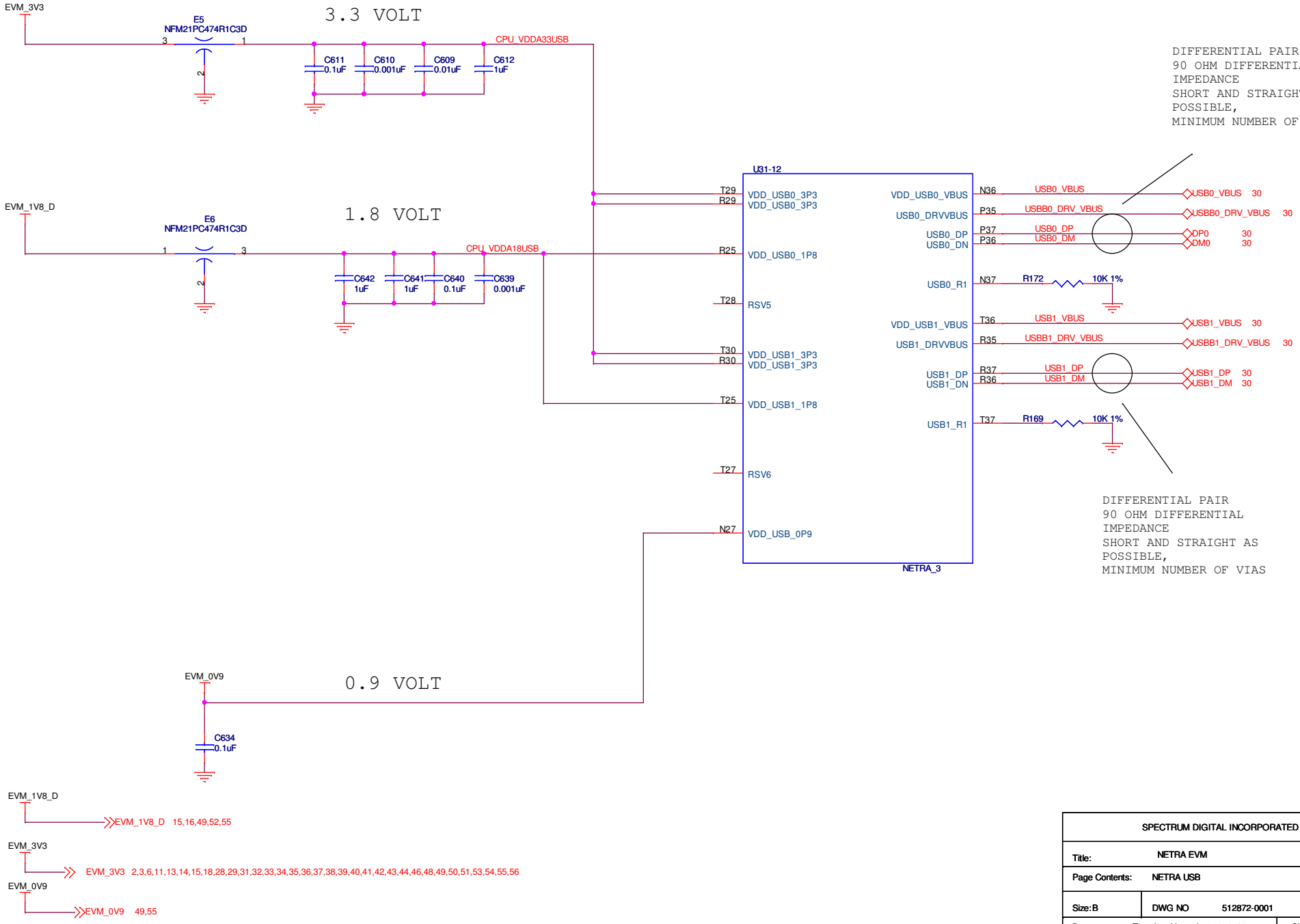

SPECTRUM DIGITAL INCORPORATED			
Title:	NETRA EVM		
Page Contents:	NETRA USB		
Size: B	DWG NO 512872-0001		Revision: A
Date:	Tuesday, November 06, 2012	Sheet 5 of 58	

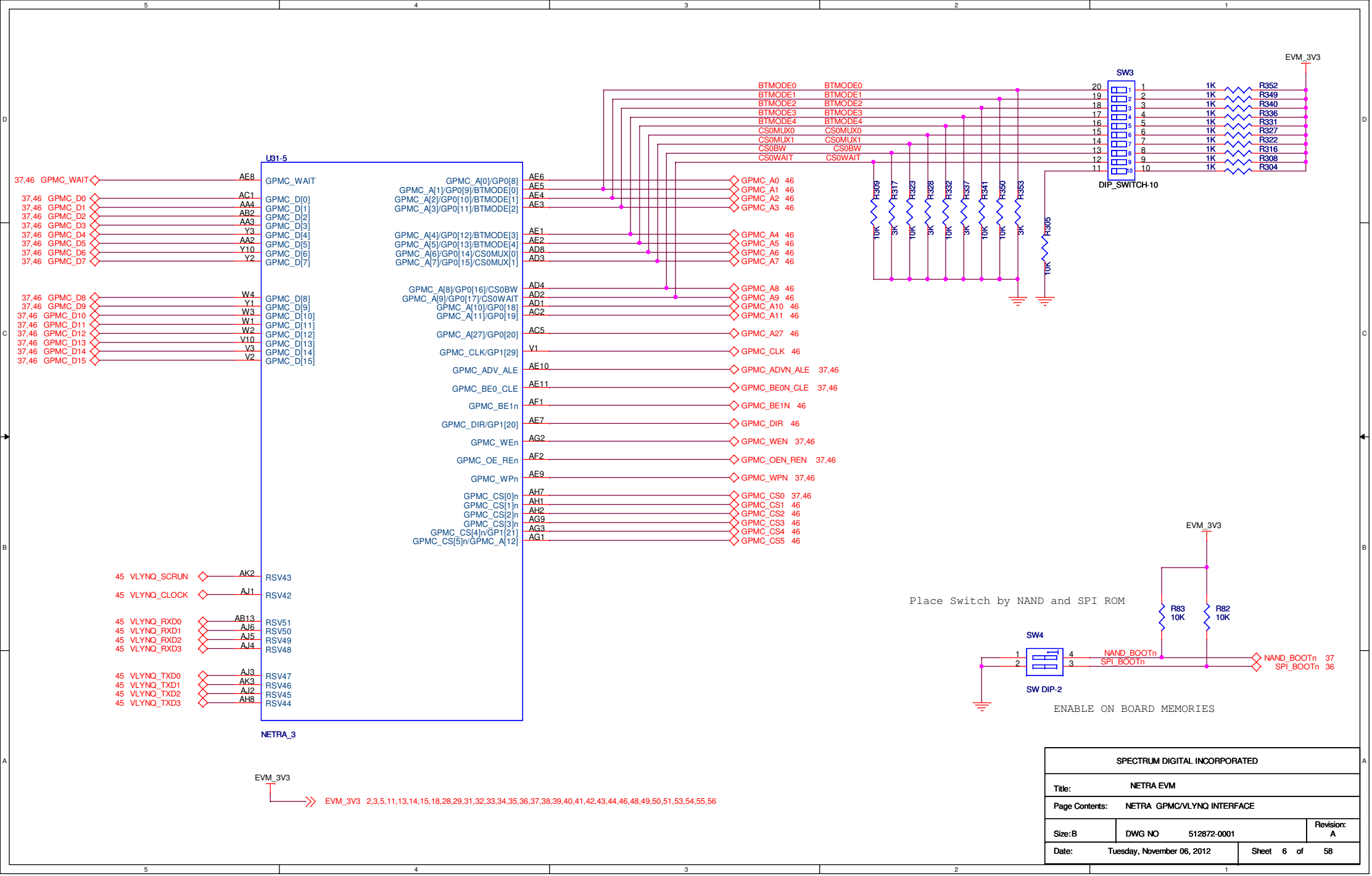

SPECTRUM DIGITAL INCORPORATED			
Title:	NETRA EVM		
Page Contents:	NETRA GPMC/VLYNQ INTERFACE		
Size: B	DWG NO 512872-0001		Revision: A
Date:	Tuesday, November 06, 2012	Sheet 6 of 58	

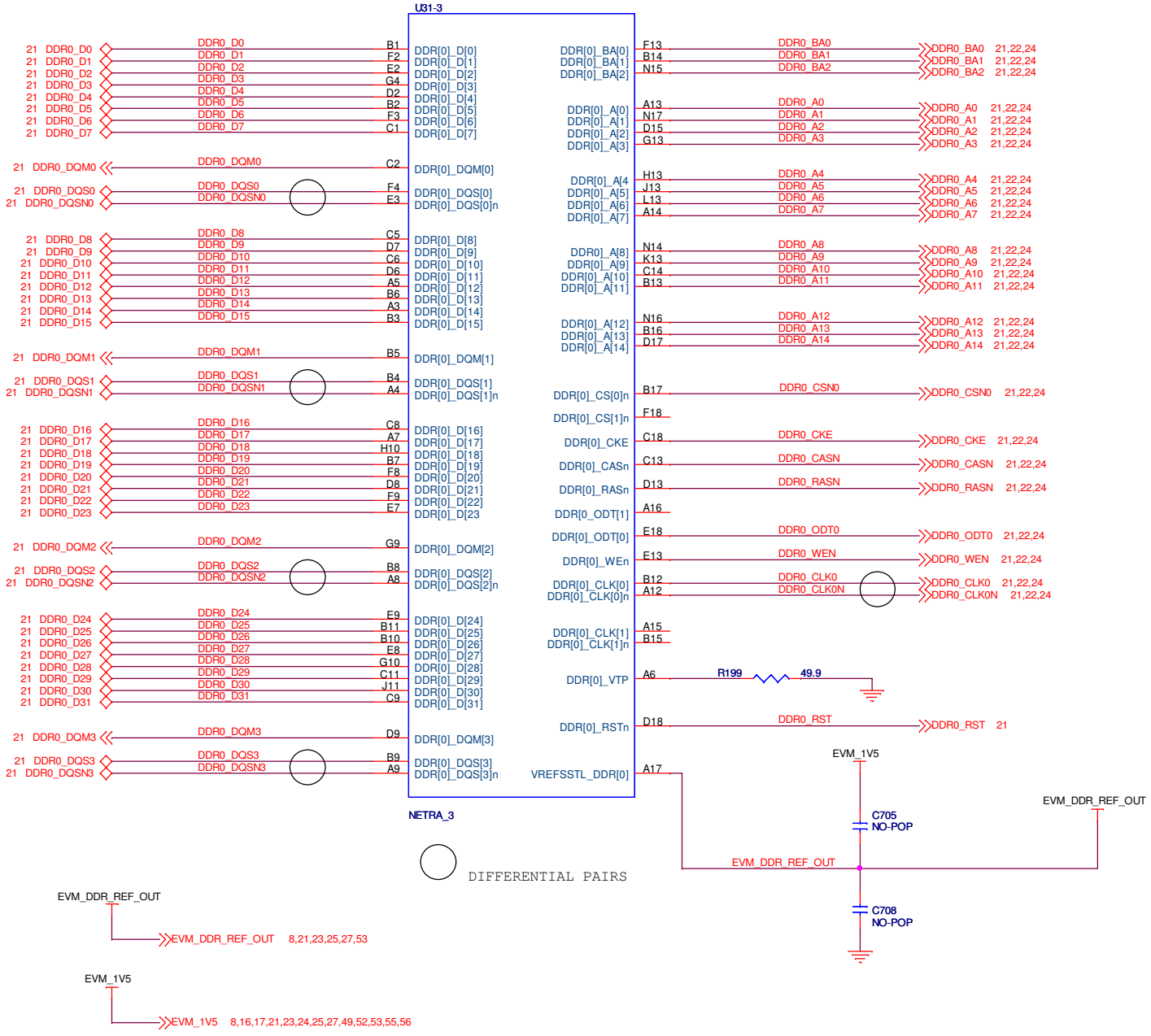

SPECTRUM DIGITAL INCORPORATED			
Title:	NETRA EVM		
Page Contents:	NETRA DDR0 INTERFACE		
Size: B	DWG NO 512872-0001		Revision: A
Date:	Tuesday, November 06, 2012	Sheet 7 of 58	

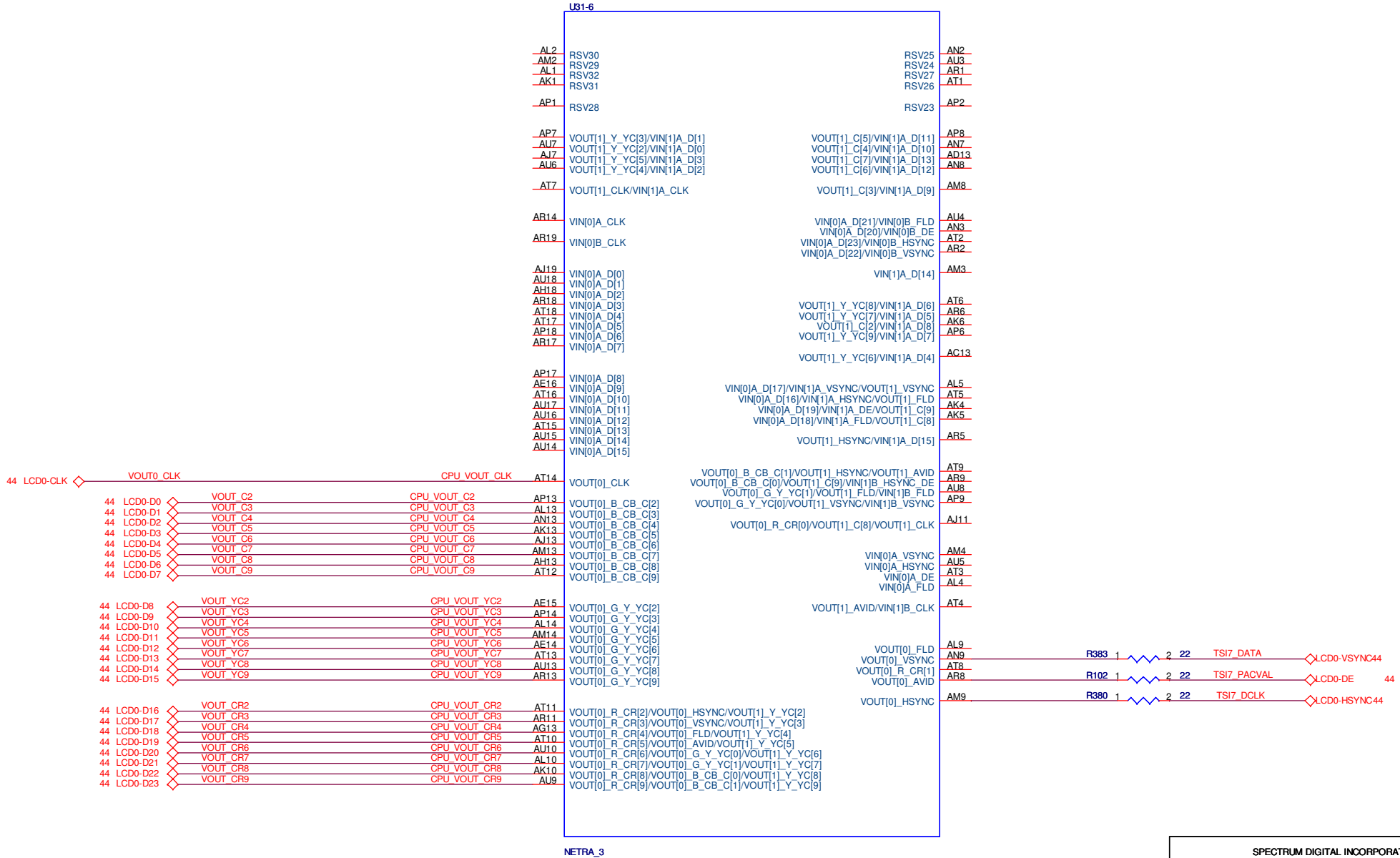

SPECTRUM DIGITAL INCORPORATED			
Title:	NETRA EVM		
Page Contents:	DIGITAL VIDEO PORTS AND TRANSPORT STREAMS		
Size: B	DWG NO 512872-0001		Revision: A
Date:	Tuesday, November 06, 2012	Sheet 10 of 58	

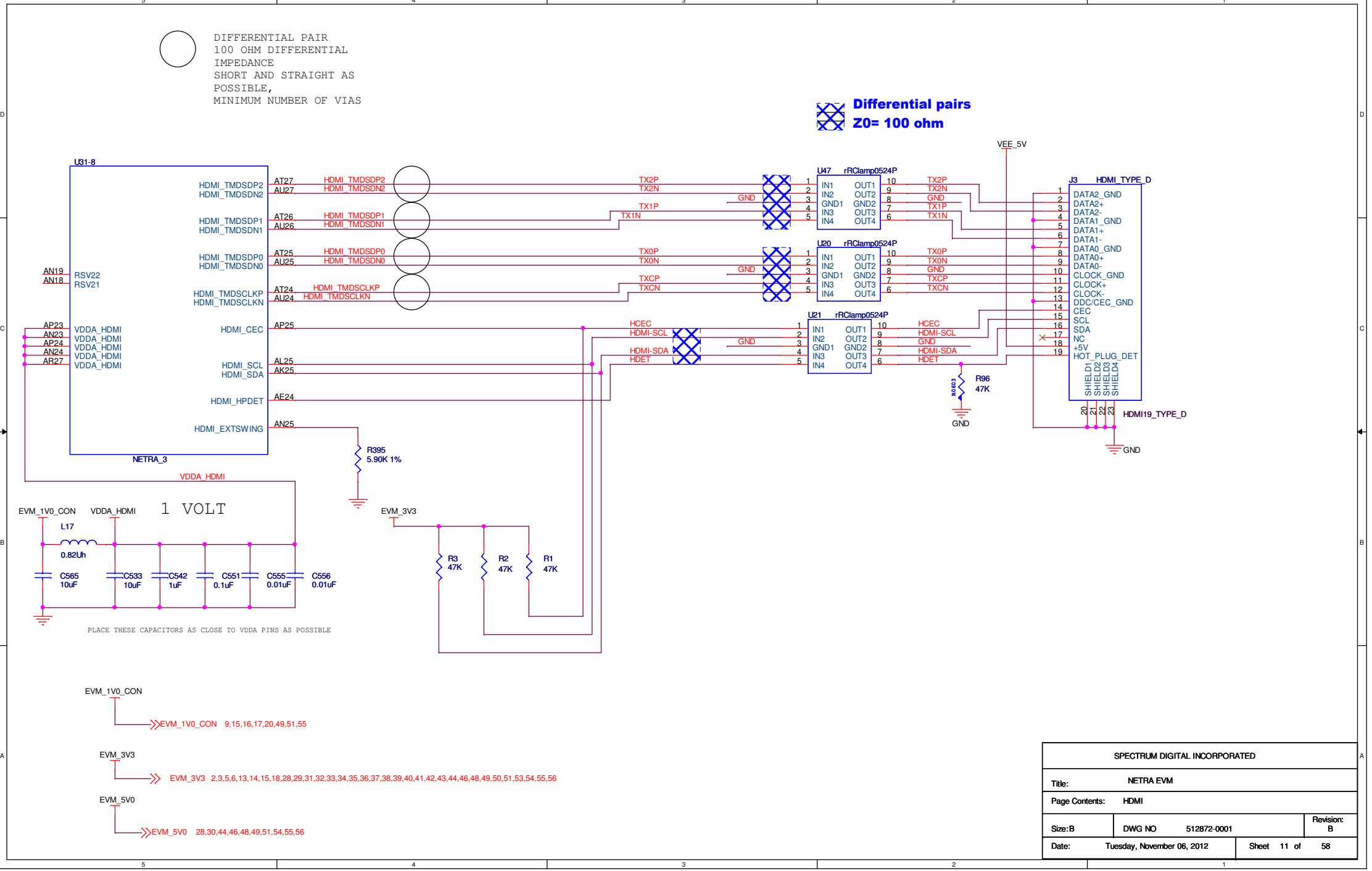
DIFFERENTIAL PAIR
100 OHM DIFFERENTIAL
IMPEDANCE
SHORT AND STRAIGHT AS
POSSIBLE,
MINIMUM NUMBER OF VIAS
Differential pairs
Z0= 100 ohm
U31-8
NETRA_3
HDMI_TMDSDP2
HDMI_TMDSDN2
HDMI_TMDSDP1
HDMI_TMDSDN1
HDMI_TMDSDP0
HDMI_TMDSDN0
HDMI_TMDSCLKP
HDMI_TMDSCLKN
HDMI_CEC
HDMI_SCL
HDMI_SDA
HDMI_HPDET
HDMI_EXTSWING
RSV22
RSV21
VDDA_HDMI
U47 rRClamp0524P
U20 rRClamp0524P
U21 rRClamp0524P
TX2P
TX2N
TX1P
TX1N
TX0P
TX0N
TXCP
TXCN
HCEC
HDMI-SCL
HDMI-SDA
HDET
GND
VEE_5V
J3 HDMI_TYPE_D
DATA2_GND
DATA2+
DATA2-
DATA1_GND
DATA1+
DATA1-
DATA0_GND
DATA0+
DATA0-
CLOCK_GND
CLOCK+
CLOCK-
DDC/CEC_GND
CEC
SCL
SDA
NC
+5V
HOT_PLUG_DET
SHIELD1
SHIELD2
SHIELD3
SHIELD4
HDMI19_TYPE_D
R96
47K
R395
5.90K 1%
1 VOLT
EVM_1V0_CON
L17
0.82Uh
C565
10uF
C533
10uF
C542
1uF
C551
0.1uF
C555
0.01uF
C556
0.01uF
PLACE THESE CAPACITORS AS CLOSE TO VDDA PINS AS POSSIBLE
EVM_3V3
R3
47K
R2
47K
R1
47K
EVM_1V0_CON 9,15,16,17,20,49,51,55
EVM_3V3 2,3,5,6,13,14,15,18,28,29,31,32,33,34,35,36,37,38,39,40,41,42,43,44,46,48,49,50,51,53,54,55,56
EVM_5V0 28,30,44,46,48,49,51,54,55,56
SPECTRUM DIGITAL INCORPORATED
Title: NETRA EVM
Page Contents: HDMI
Size: B
DWG NO 512872-0001
Revision: B
Date: Tuesday, November 06, 2012
Sheet 11 of 58

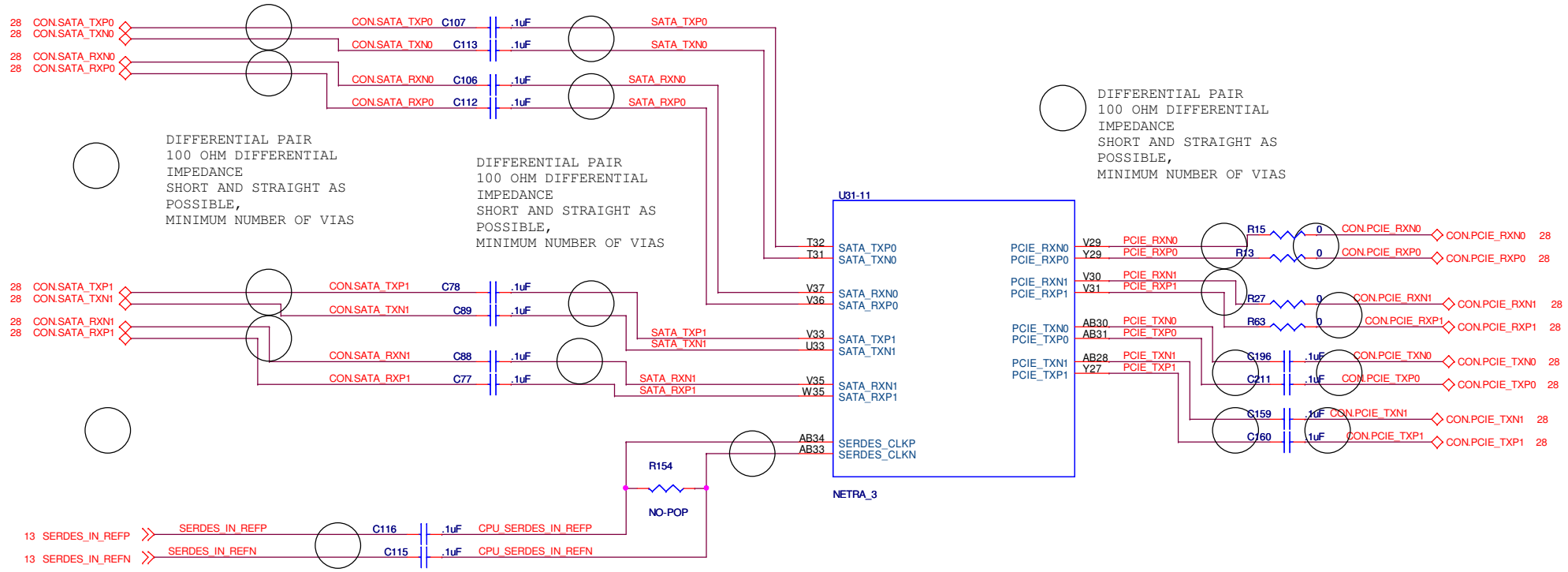

SPECTRUM DIGITAL INCORPORATED			
Title:	NETRA EVM		
Page Contents:	SATA INTERFACE		
Size: B	DWG NO 512872-0001		Revision: A
Date:	Tuesday, November 06, 2012	Sheet 12 of 58	

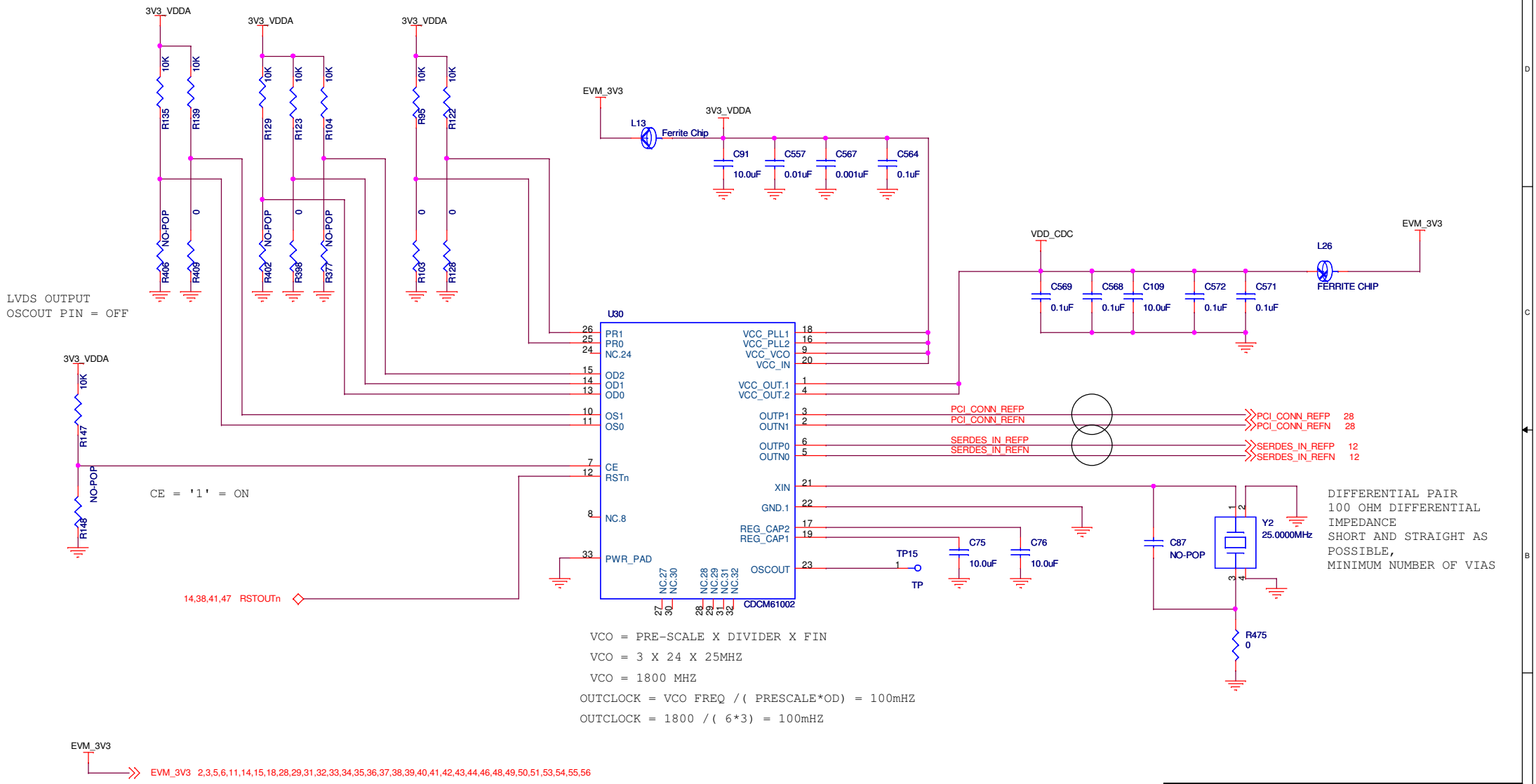

SPECTRUM DIGITAL INCORPORATED			
Title:	NETRA EVM		
Page Contents:	SERDES CLOCKS		
Size: B	DWG NO 512872-0001		Revision: A
Date:	Tuesday, November 06, 2012	Sheet 13 of 58	

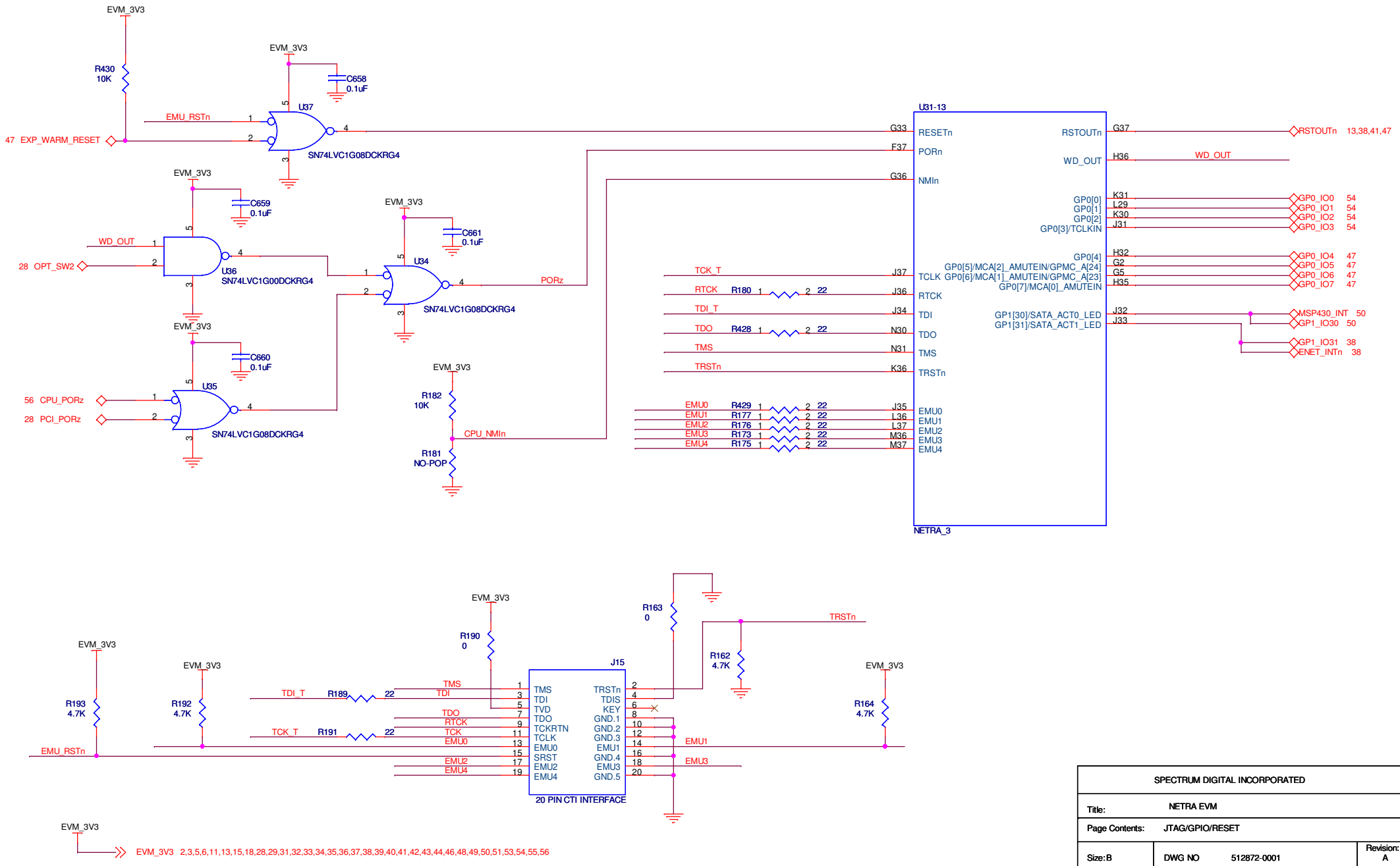

SPECTRUM DIGITAL INCORPORATED			
Title:	NETRA EVM		
Page Contents:	JTAG/GPIO/RESET		
Size: B	DWG NO 512872-0001		Revision: A
Date:	Tuesday, November 06, 2012	Sheet 14 of 58	

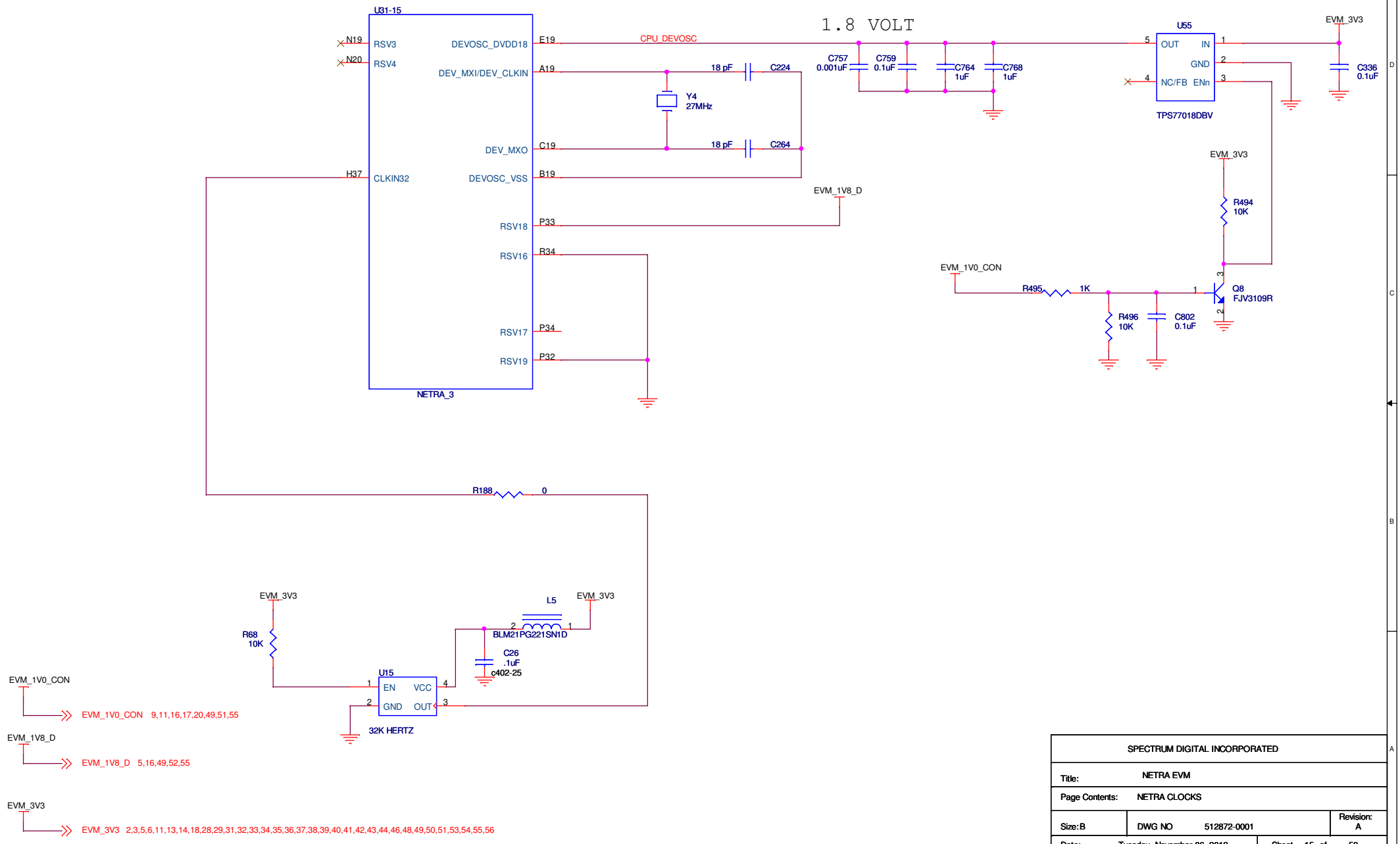

SPECTRUM DIGITAL INCORPORATED			
Title:	NETRA EVM		
Page Contents:	NETRA CLOCKS		
Size: B	DWG NO 512872-0001		Revision: A
Date:	Tuesday, November 06, 2012	Sheet 15 of 58	

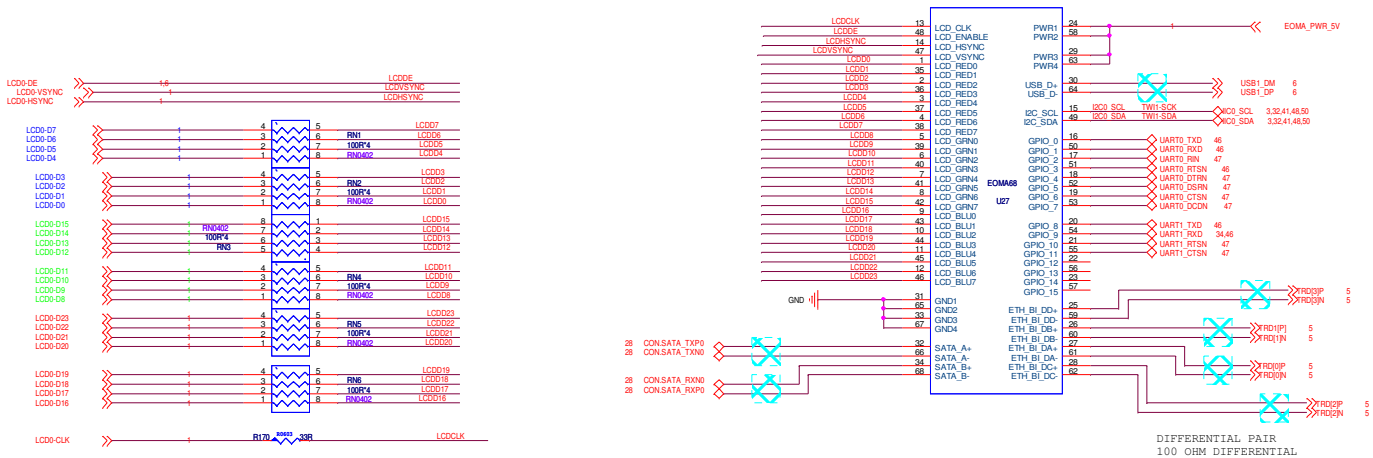

DIFFERENTIAL PAIR
100 OHM DIFFERENTIAL
IMPEDANCE
SHORT AND STRAIGHT AS
POSSIBLE,
MINIMUM NUMBER OF VIAS

Title	MAINCHIP_PAD_DDR3	
	LCD	
Size A2	Document Number <V1.0>	Rev
Date: Tuesday, November 06, 2012	Sheet 15 of 18	

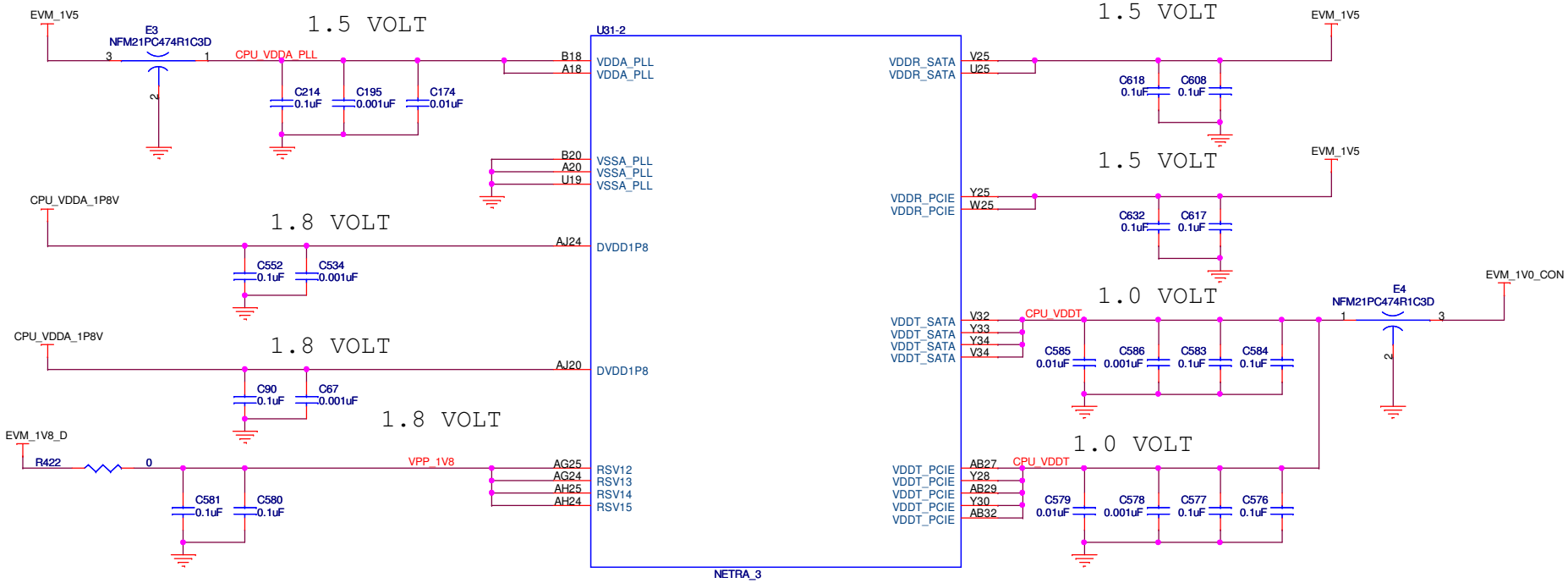

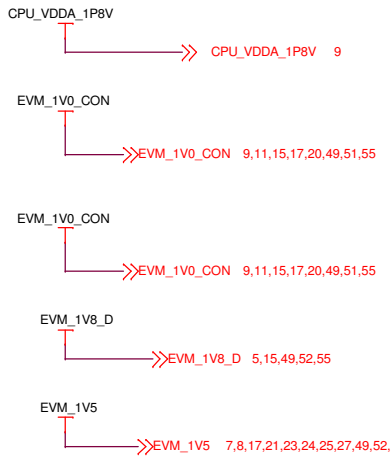

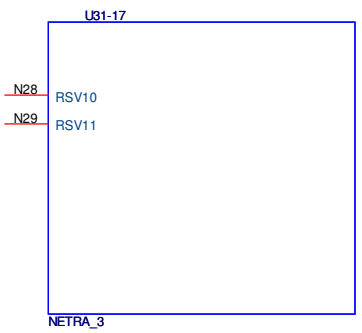

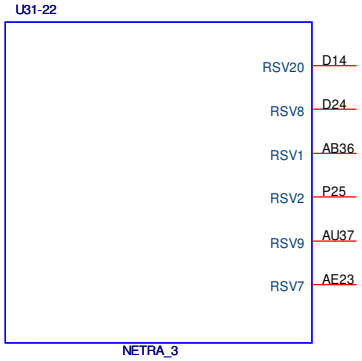

SPECTRUM DIGITAL INCORPORATED			
Title:	NETRA EVM		
Page Contents:	NETRA POWER PINS		
Size: B	DWG NO 512872-0001		Revision: A
Date:	Tuesday, November 06, 2012	Sheet 16 of 58	

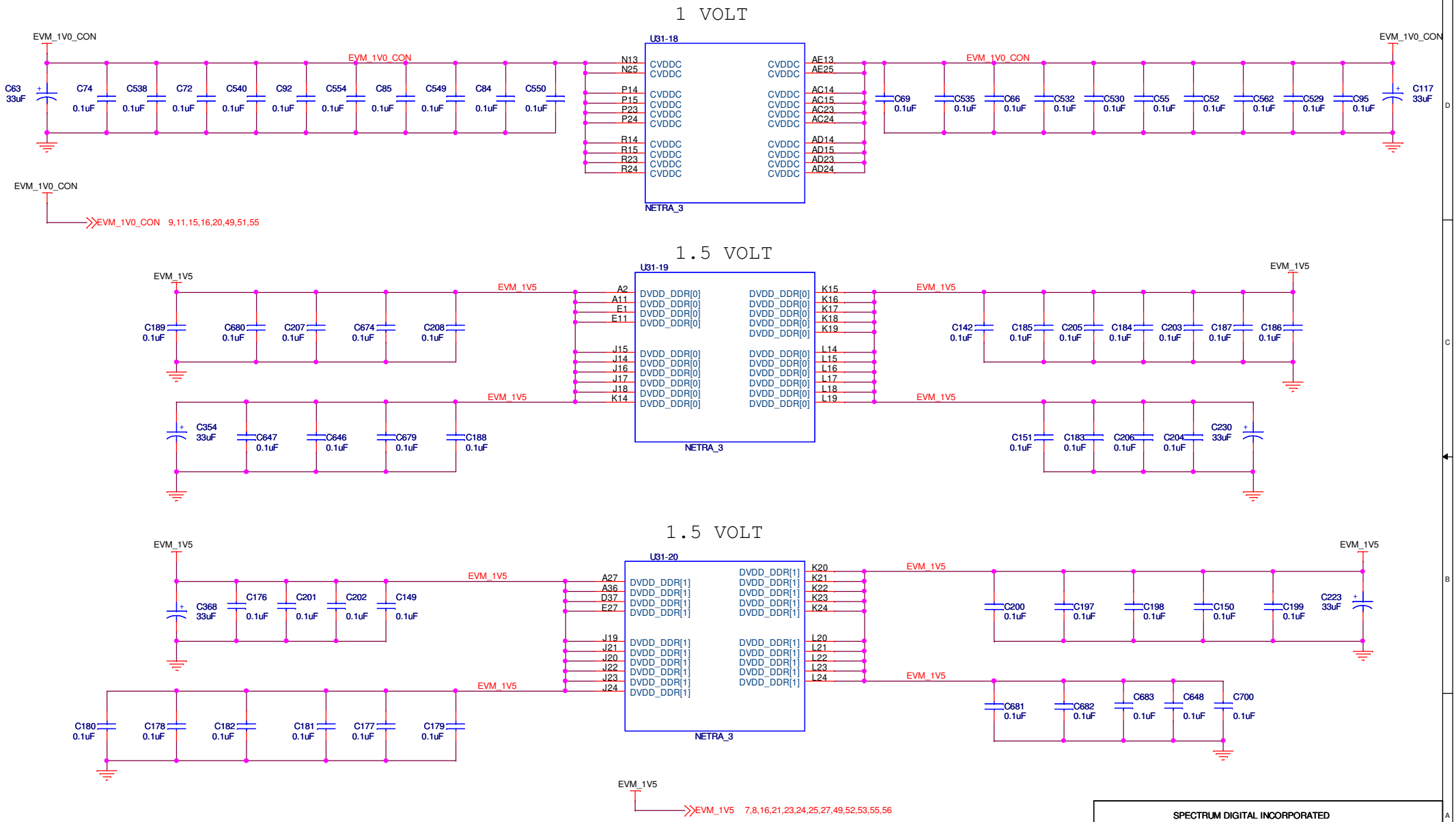

SPECTRUM DIGITAL INCORPORATED			
Title:	NETRA EVM		
Page Contents:	NETRA POWER PINS II		
Size: B	DWG NO 512872-0001		Revision: A
Date:	Tuesday, November 06, 2012	Sheet 17 of 58	

3.3 VOLT

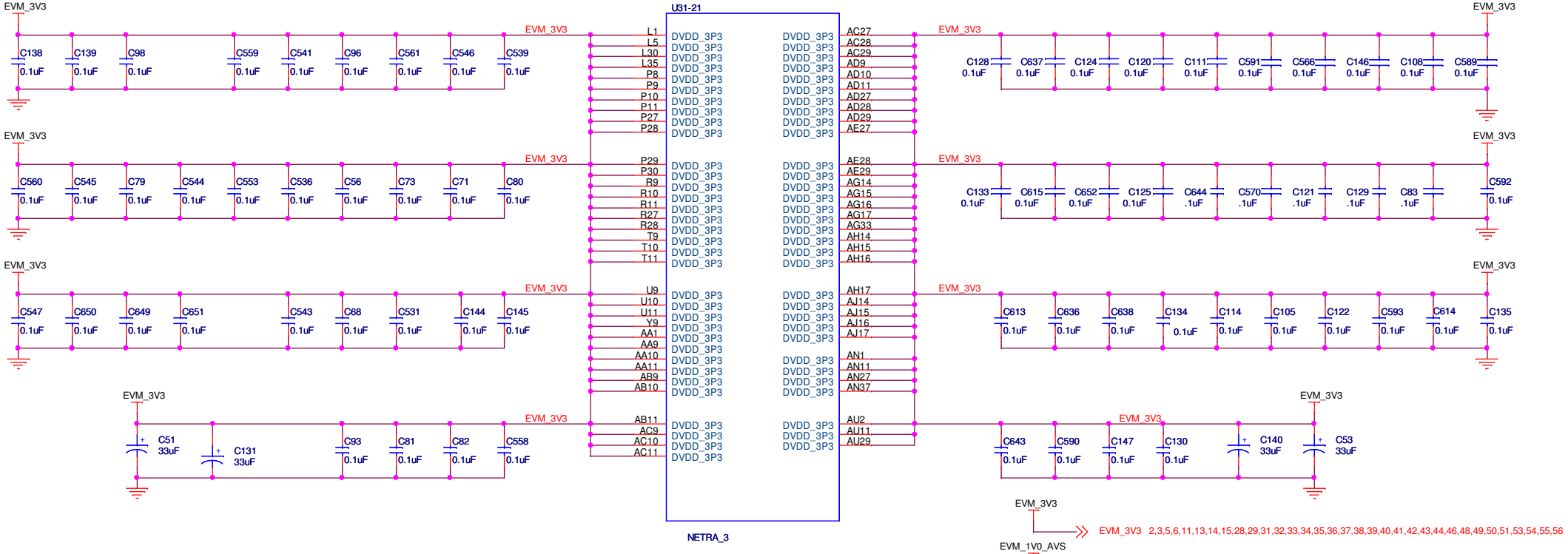

CORE AVS SUPPLY 1.0 VOLT

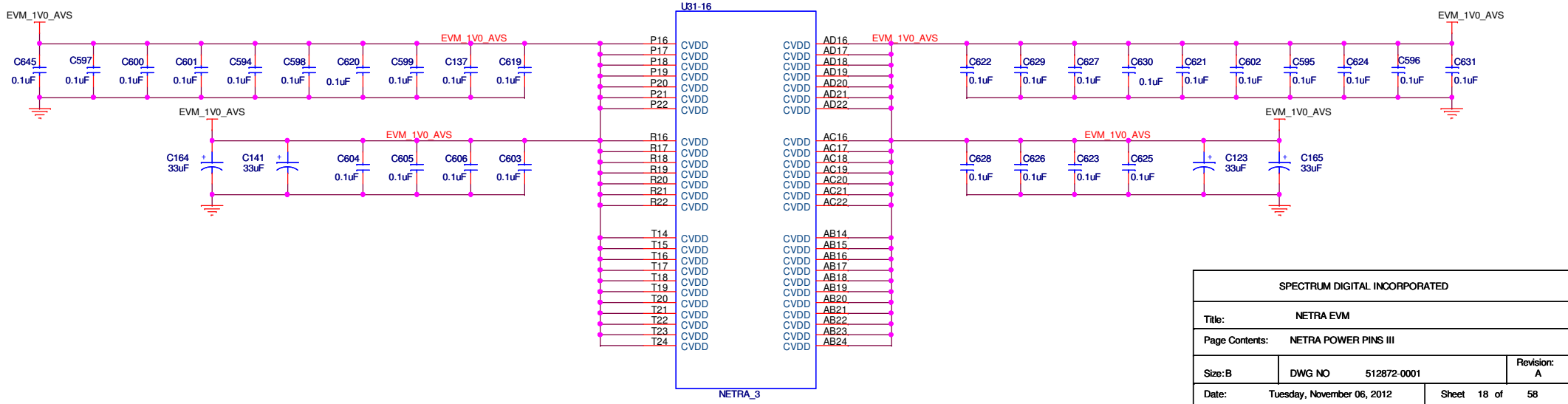

SPECTRUM DIGITAL INCORPORATED			
Title:	NETRA EVM		
Page Contents:	NETRA POWER PINS III		
Size: B	DWG NO 512872-0001		Revision: A
Date:	Tuesday, November 06, 2012	Sheet 18 of 58	

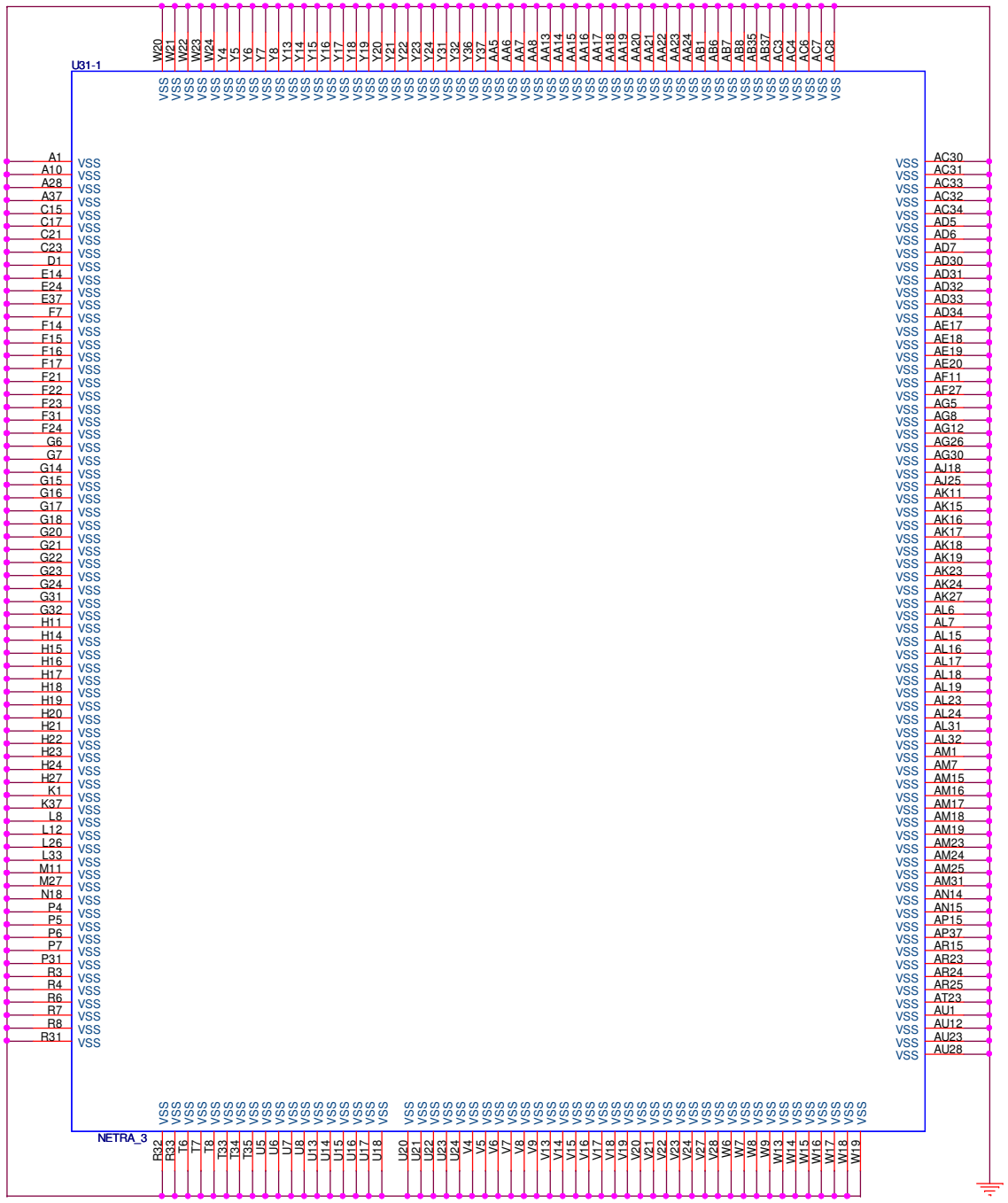

SPECTRUM DIGITAL INCORPORATED			
Title:	NETRA EVM		
Page Contents:	NETRA GROUND PINS		
Size: B	DWG NO 512872-0001		Revision: A
Date:	Tuesday, November 06, 2012	Sheet 19 of 58	

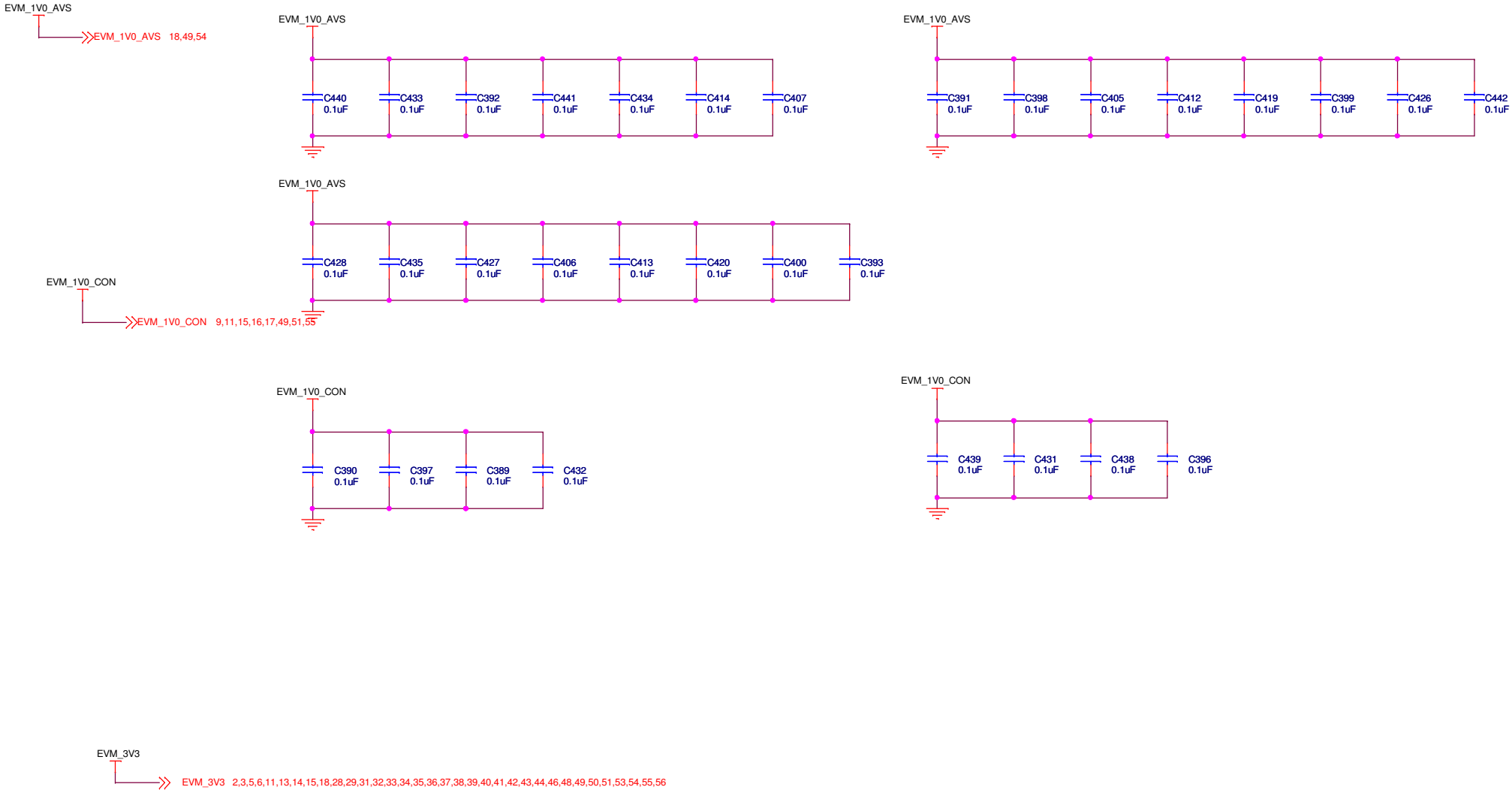

SPECTRUM DIGITAL INCORPORATED			
Title:	NETRA EVM		
Page Contents:	CAPS, 1V0_CON,1V0_AVS		
Size: B	DWG NO 512872-0001		Revision: A
Date:	Tuesday, November 06, 2012	Sheet 20 of 58	

This section is an outline of vias labeled as Testpoints in the schematic. This allows us to determine pwb line lengths for memory to memory and CPU to memory it is purely a visibility tool no actual "component" is used the vias are just replaced with a via that is labeled a test point

SPECTRUM DIGITAL INCORPORATED			
Title:	NETRA EVM		
Page Contents:	DDR0 ADDRESS CONTROL TEST POINTS FOR ROUTING		
Size: B	DWG NO 512872-0001		Revision: A
Date:	Tuesday, November 06, 2012	Sheet 22 of 58	

SPECTRUM DIGITAL INCORPORATED			
Title:	NETRA EVM		
Page Contents:	DDR MEMORY CAPS DDR0 INTERFACE		
Size: B	DWG NO 512872-0001		Revision: A
Date:	Tuesday, November 06, 2012	Sheet 23 of 58	

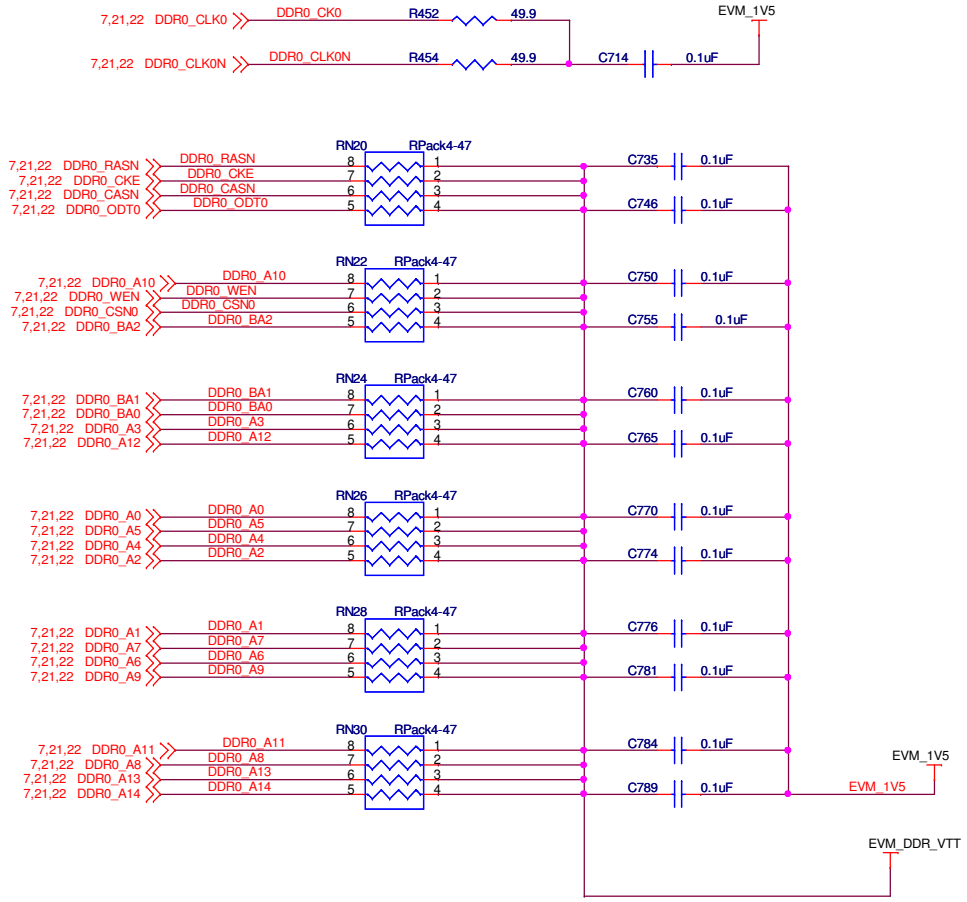

SPECTRUM DIGITAL INCORPORATED		
Title: NETRA EVM		
Page Contents: EMIF DDR0 DDR3 MEM BANK1		
Size: B	DWG NO 512872-0001	Revision: A
Date: Tuesday, November 06, 2012	Sheet 24 of 58	

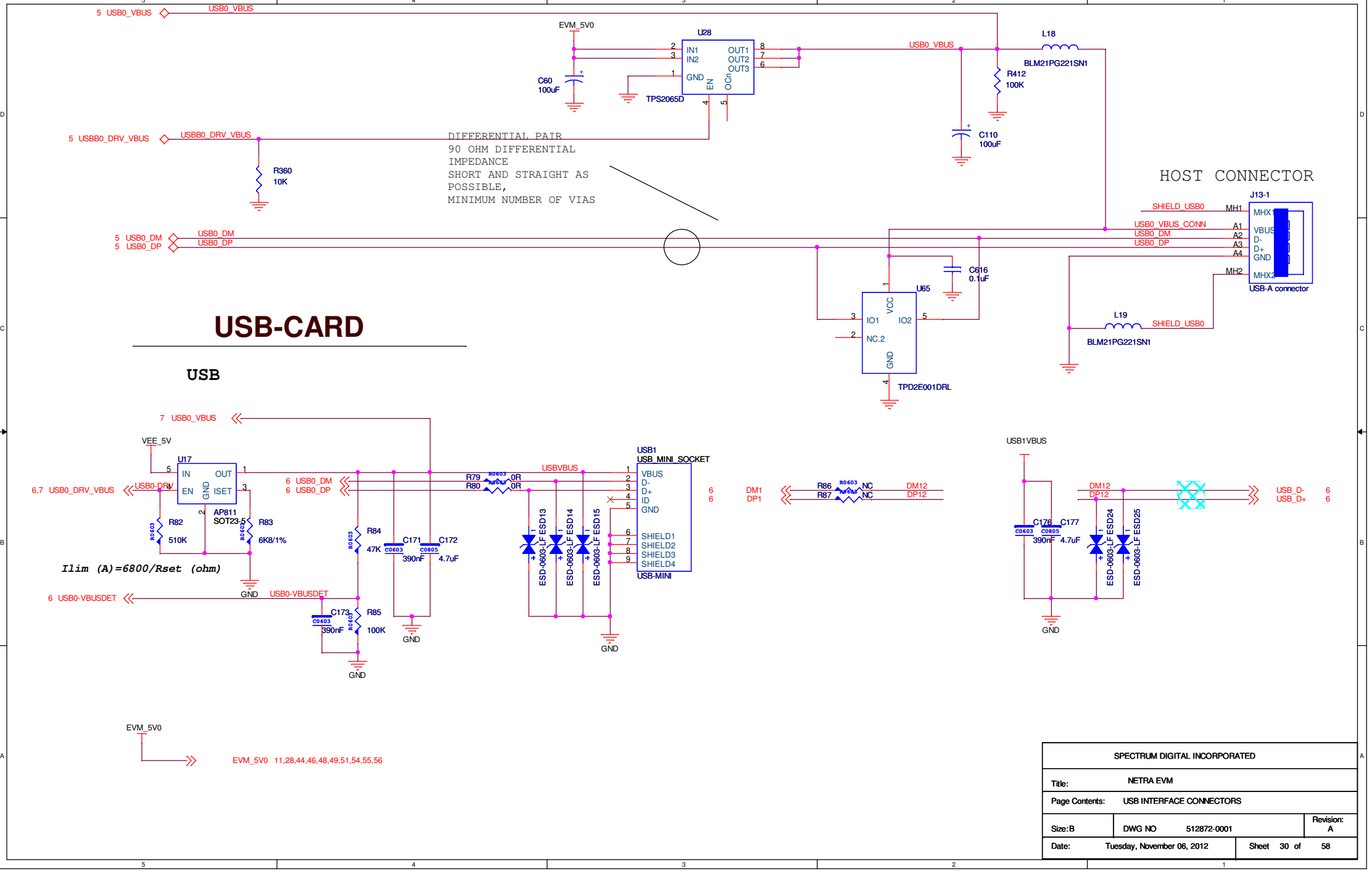

SPECTRUM DIGITAL INCORPORATED			
Title:	NETRA EVM		
Page Contents:	USB INTERFACE CONNECTORS		
Size: B	DWG NO 512872-0001		Revision: A
Date:	Tuesday, November 06, 2012	Sheet 30 of 58	

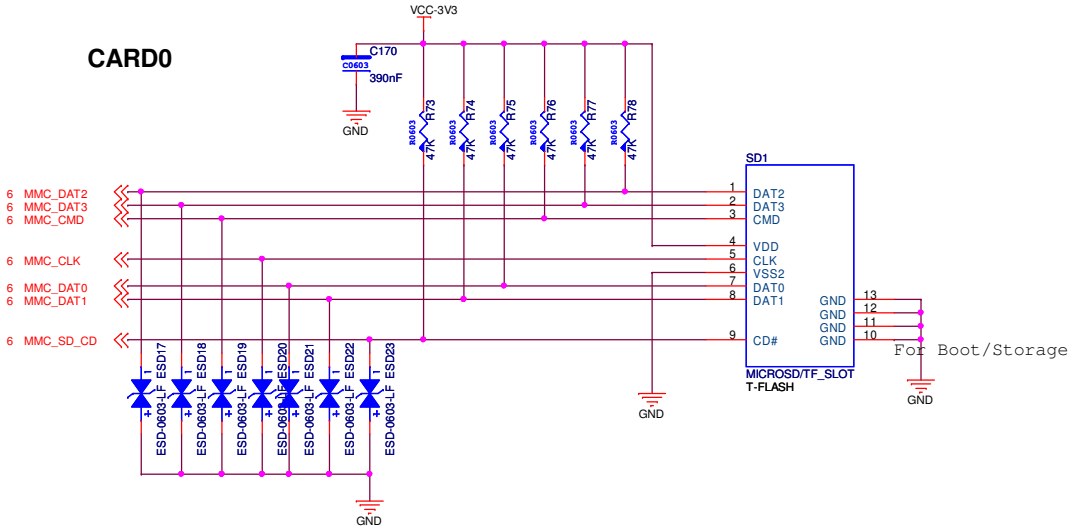

MAINCHIP_PAD_DDR3			
Title	USB-CARD		
Size A3	Document Number <V1.0>		Rev
Date: Tuesday, November 06, 2012	Sheet 35 of 18		

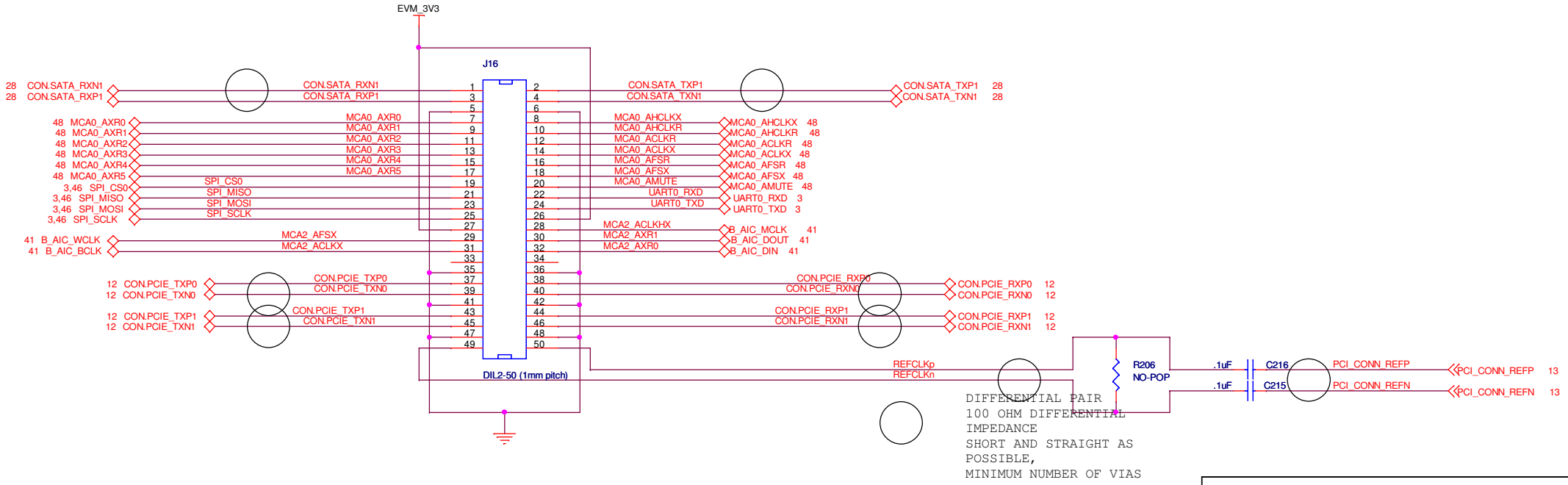

SPECTRUM DIGITAL INCORPORATED			
Title:	NETRA EVM		
Page Contents:	SPI EEPROM		
Size: B	DWG NO 512872-0001		Revision: A
Date:	Tuesday, November 06, 2012	Sheet 36 of 58	

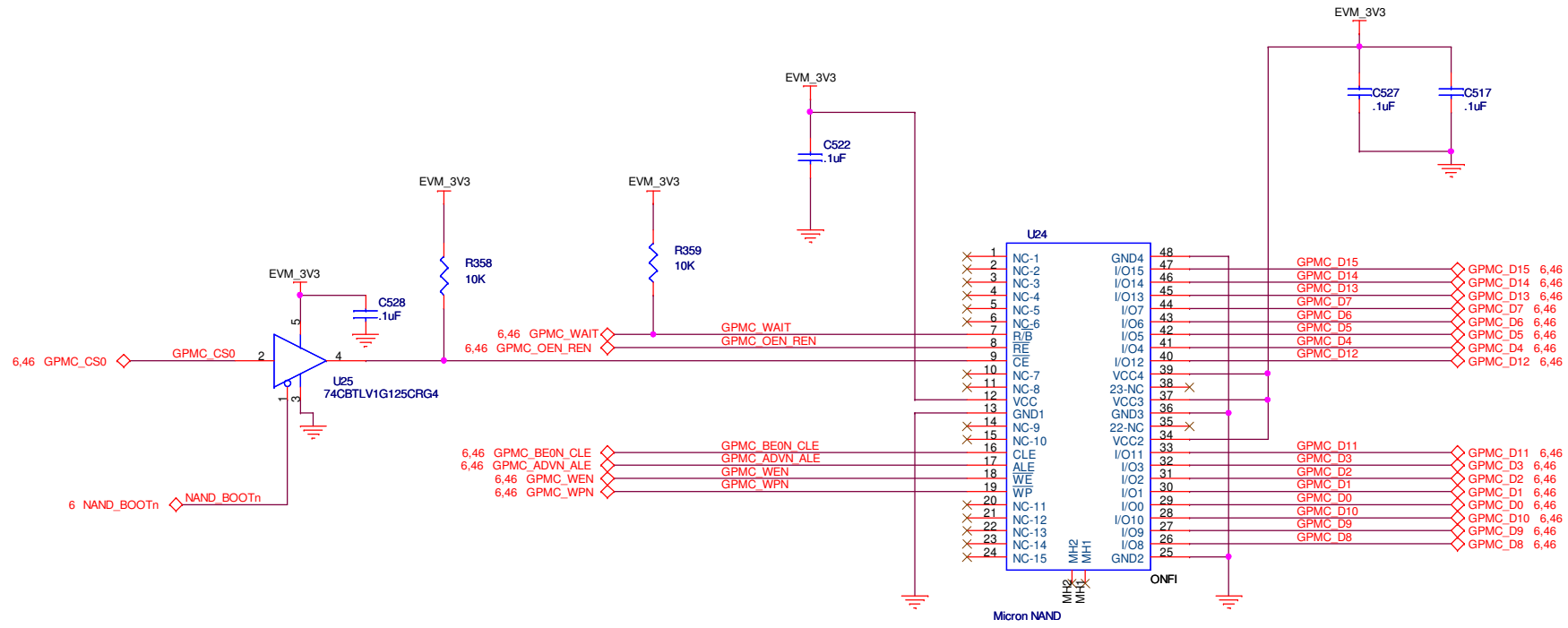

EVM IS SUPPORTED WITH MICRON MT29F2G16AADWP:D

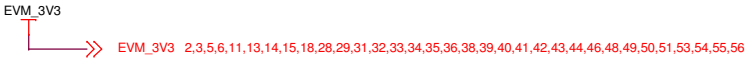

SPECTRUM DIGITAL INCORPORATED			
Title:	NETRA EVM		
Page Contents:	NAND FLASH		
Size: B	DWG NO 512872-0001		Revision: A
Date:	Tuesday, November 06, 2012	Sheet 37 of 58	

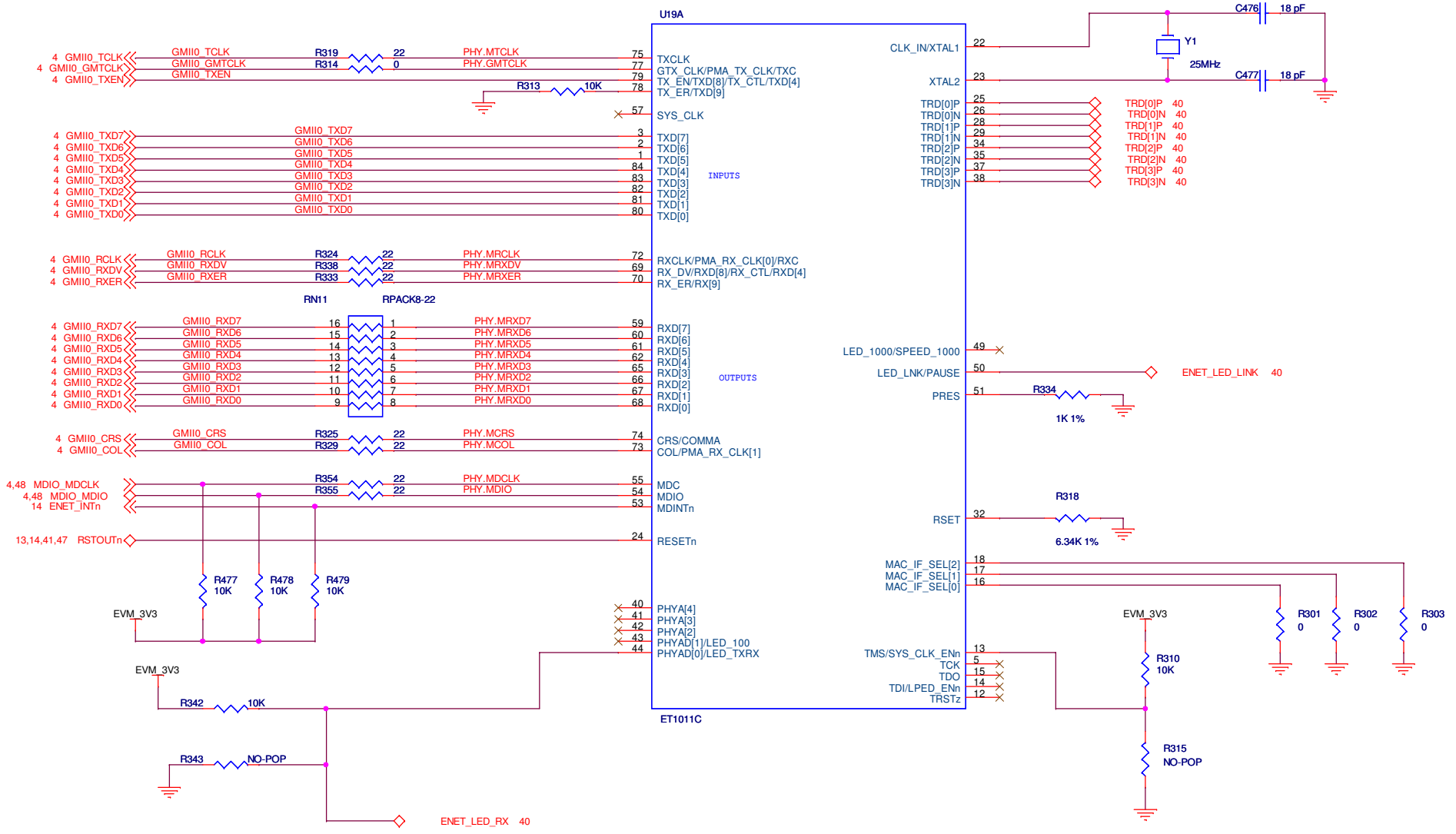

SPECTRUM DIGITAL INCORPORATED			
Title:	NETRA EVM		
Page Contents:	ETHERNET INTERFACE		
Size: B	DWG NO 512872-0001		Revision: A
Date:	Tuesday, November 06, 2012	Sheet 38 of 58	

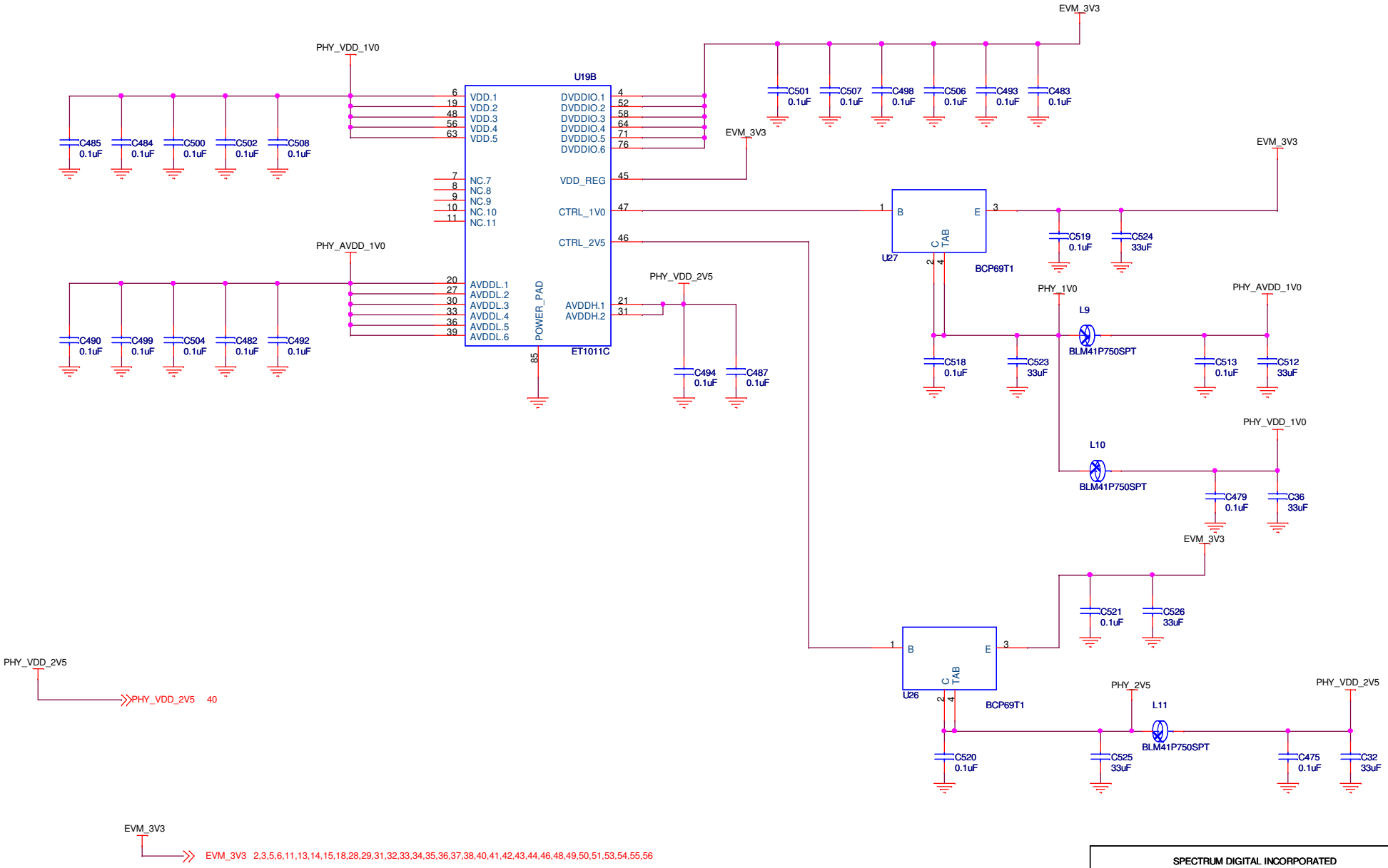

SPECTRUM DIGITAL INCORPORATED			
Title:	NETRA EVM		
Page Contents:	ETHERNET - POWER		
Size: B	DWG NO 512872-0001		Revision: A
Date:	Tuesday, November 06, 2012	Sheet 39 of 58	

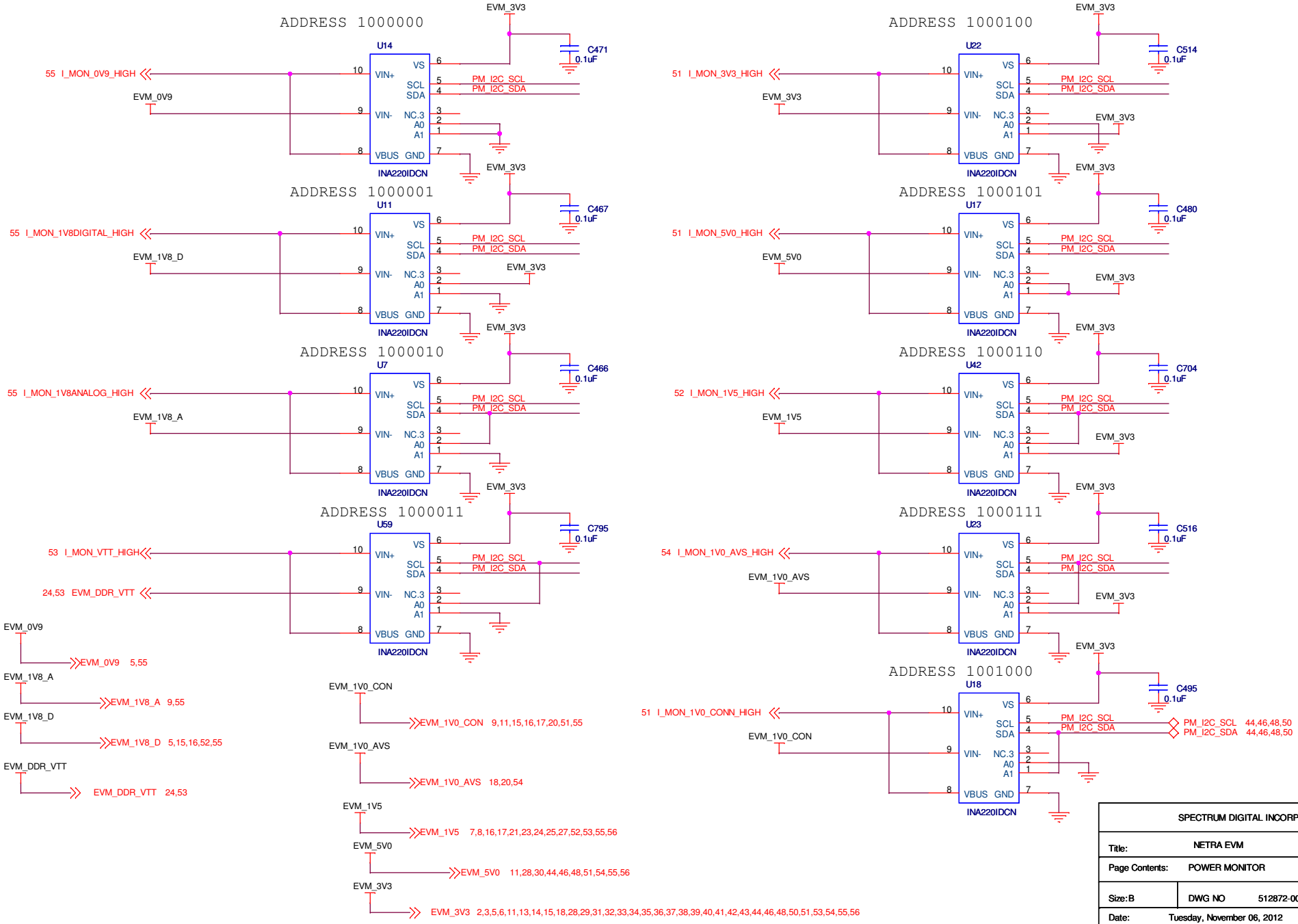

SPECTRUM DIGITAL INCORPORATED			
Title:	NETRA EVM		
Page Contents:	POWER MONITOR		
Size: B	DWG NO 512872-0001		Revision: A
Date:	Tuesday, November 06, 2012	Sheet 49 of 58	

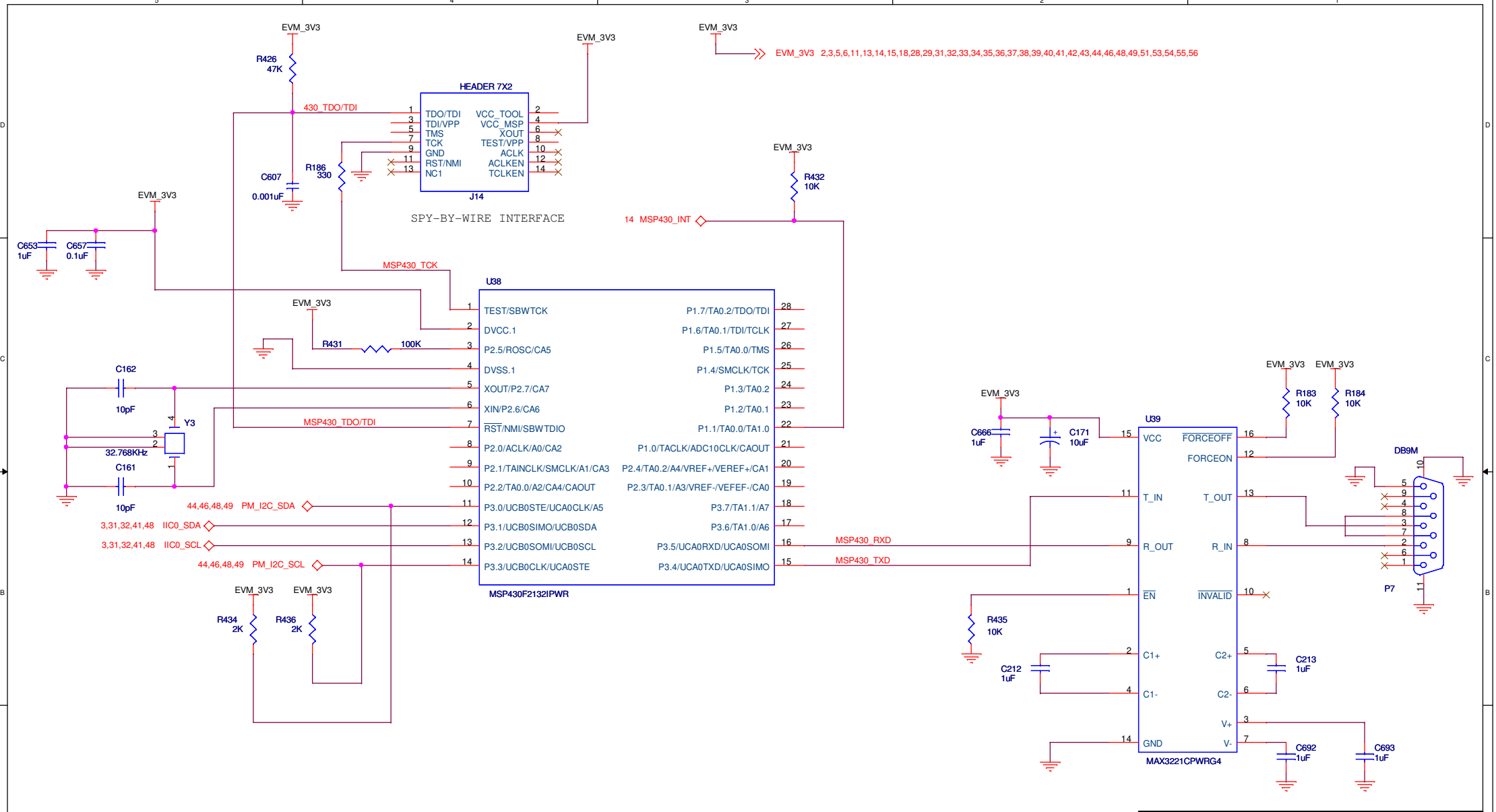

SPECTRUM DIGITAL INCORPORATED			
Title:	NETRA EVM		
Page Contents:	POWER MONITOR CPU		
Size: B	DWG NO 512872-0001		Revision: A
Date:	Tuesday, November 06, 2012	Sheet 50 of 58	

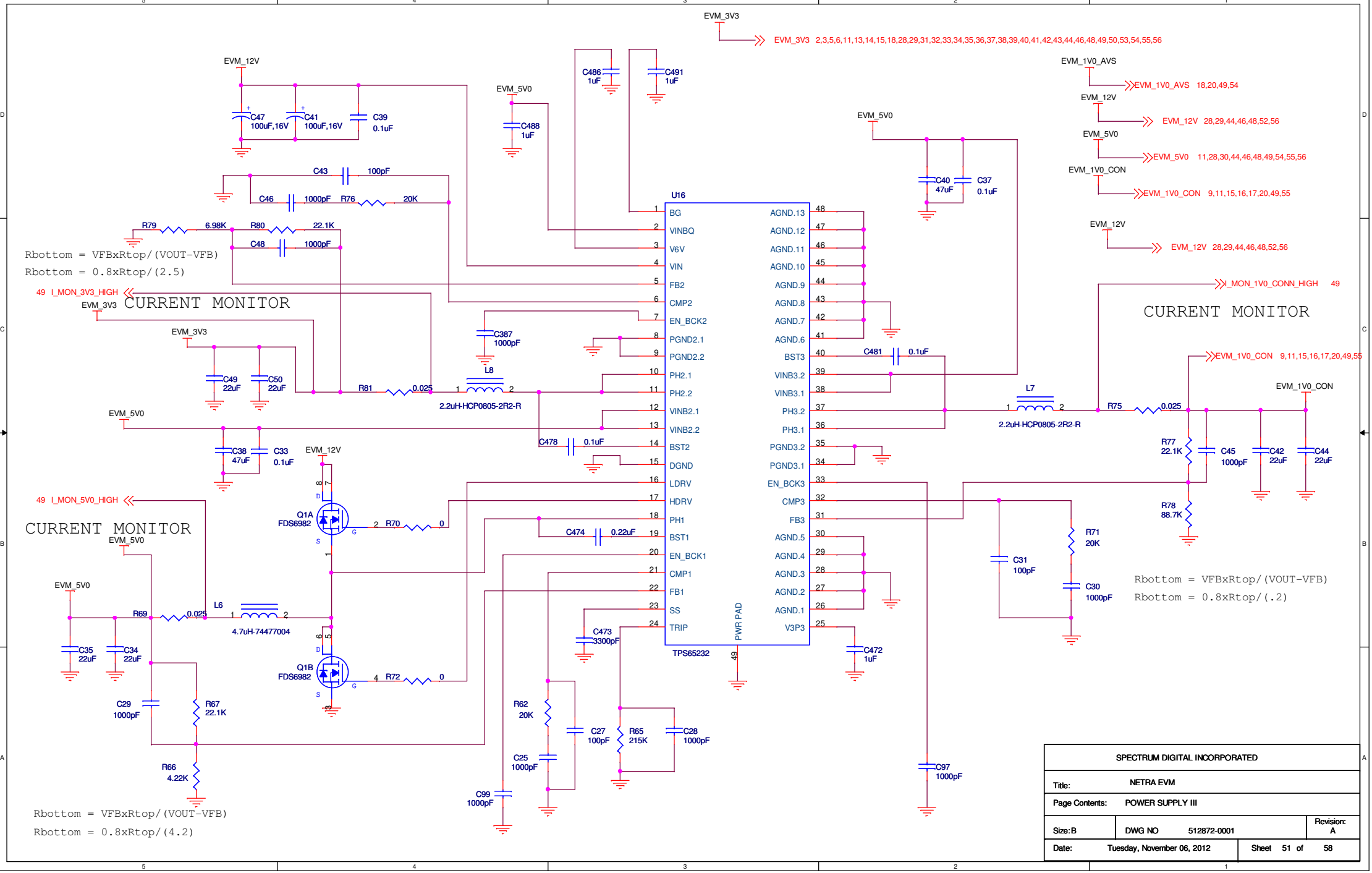
EVM_3V3
EVM_3V3 2,3,5,6,11,13,14,15,18,28,29,31,32,33,34,35,36,37,38,39,40,41,42,43,44,46,48,49,50,53,54,55,56
EVM_12V
EVM_5V0
EVM_1V0_AVS
EVM_1V0_AVS 18,20,49,54
EVM_12V 28,29,44,46,48,52,56
EVM_5V0 11,28,30,44,46,48,49,54,55,56
EVM_1V0_CON
EVM_1V0_CON 9,11,15,16,17,20,49,55
C47 100uF,16V
C41 100uF,16V
C39 0.1uF
C486 1uF
C491 1uF
C488 1uF
C40 47uF
C37 0.1uF
C43 100pF
C46 1000pF
R76 20K
R79 6.98K
R80 22.1K
C48 1000pF
Rbottom = VFBxRtop/(VOUT-VFB)
Rbottom = 0.8xRtop/(2.5)
49 I_MON_3V3_HIGH
CURRENT MONITOR
C49 22uF
C50 22uF
R81 0.025
C387 1000pF
L8
2.2uH-HCP0805-2R2-R
C38 47uF
C33 0.1uF
C478 0.1uF
C481 0.1uF
U16
BG
VINBQ
V6V
VIN
FB2
CMP2
EN_BCK2
PGND2.1
PGND2.2
PH2.1
PH2.2
VINB2.1
VINB2.2
BST2
DGND
LDRV
HDRV
PH1
BST1
EN_BCK1
CMP1
FB1
SS
TRIP
AGND.13
AGND.12
AGND.11
AGND.10
AGND.9
AGND.8
AGND.7
AGND.6
BST3
VINB3.2
VINB3.1
PH3.2
PH3.1
PGND3.2
PGND3.1
EN_BCK3
CMP3
FB3
AGND.5
AGND.4
AGND.3
AGND.2
AGND.1
V3P3
PWR PAD
TPS65232
L7
2.2uH-HCP0805-2R2-R
R75 0.025
I_MON_1V0_CONN_HIGH 49
CURRENT MONITOR
R77 22.1K
C45 1000pF
C42 22uF
C44 22uF
R78 88.7K
R71 20K
C31 100pF
C30 1000pF
Rbottom = VFBxRtop/(VOUT-VFB)
Rbottom = 0.8xRtop/(.2)
49 I_MON_5V0_HIGH
CURRENT MONITOR
Q1A FDS6982
R70 0
C474 0.22uF
Q1B FDS6982
R72 0
R69 0.025
L6
4.7uH-74477004
C35 22uF
C34 22uF
C29 1000pF
R67 22.1K
R66 4.22K
C473 3300pF
C472 1uF
R62 20K
C27 100pF
R65 215K
C28 1000pF
C25 1000pF
C99 1000pF
C97 1000pF
Rbottom = VFBxRtop/(VOUT-VFB)
Rbottom = 0.8xRtop/(4.2)
SPECTRUM DIGITAL INCORPORATED
Title: NETRA EVM
Page Contents: POWER SUPPLY III
Size: B
DWG NO 512872-0001
Revision: A
Date: Tuesday, November 06, 2012
Sheet 51 of 58

CHECKED VALUES - COMPLETE for feedback
maybe tweak 0402 and 0603

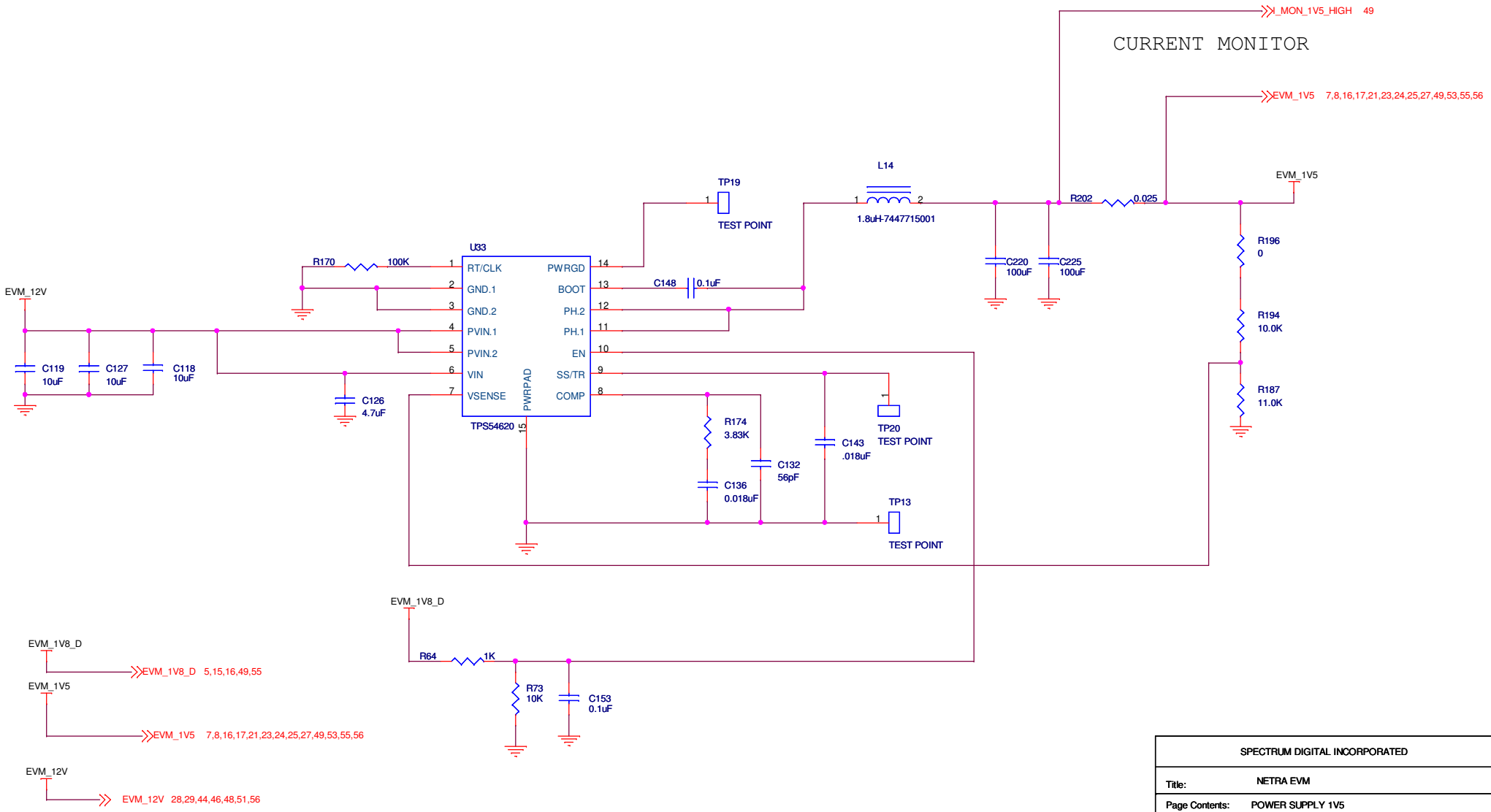

SPECTRUM DIGITAL INCORPORATED			
Title:	NETRA EVM		
Page Contents:	POWER SUPPLY 1V5		
Size: B	DWG NO 512872-0001		Revision: A
Date:	Tuesday, November 06, 2012	Sheet 52 of 58	

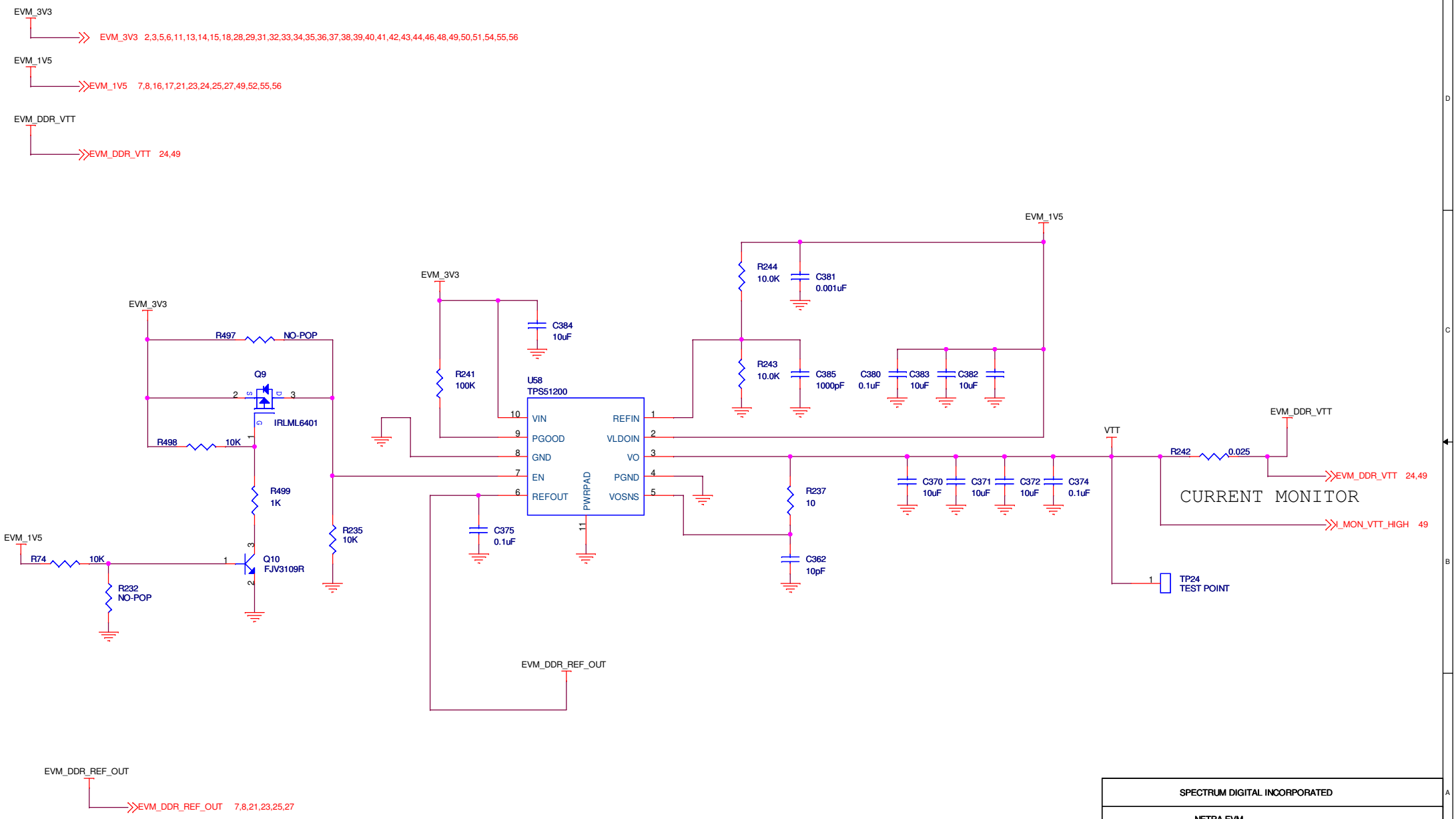

SPECTRUM DIGITAL INCORPORATED			
Title:	NETRA EVM		
Page Contents:	POWER SUPPLY VTT		
Size: B	DWG NO 512872-0001		Revision: C
Date:	Tuesday, November 06, 2012	Sheet 53 of 58	

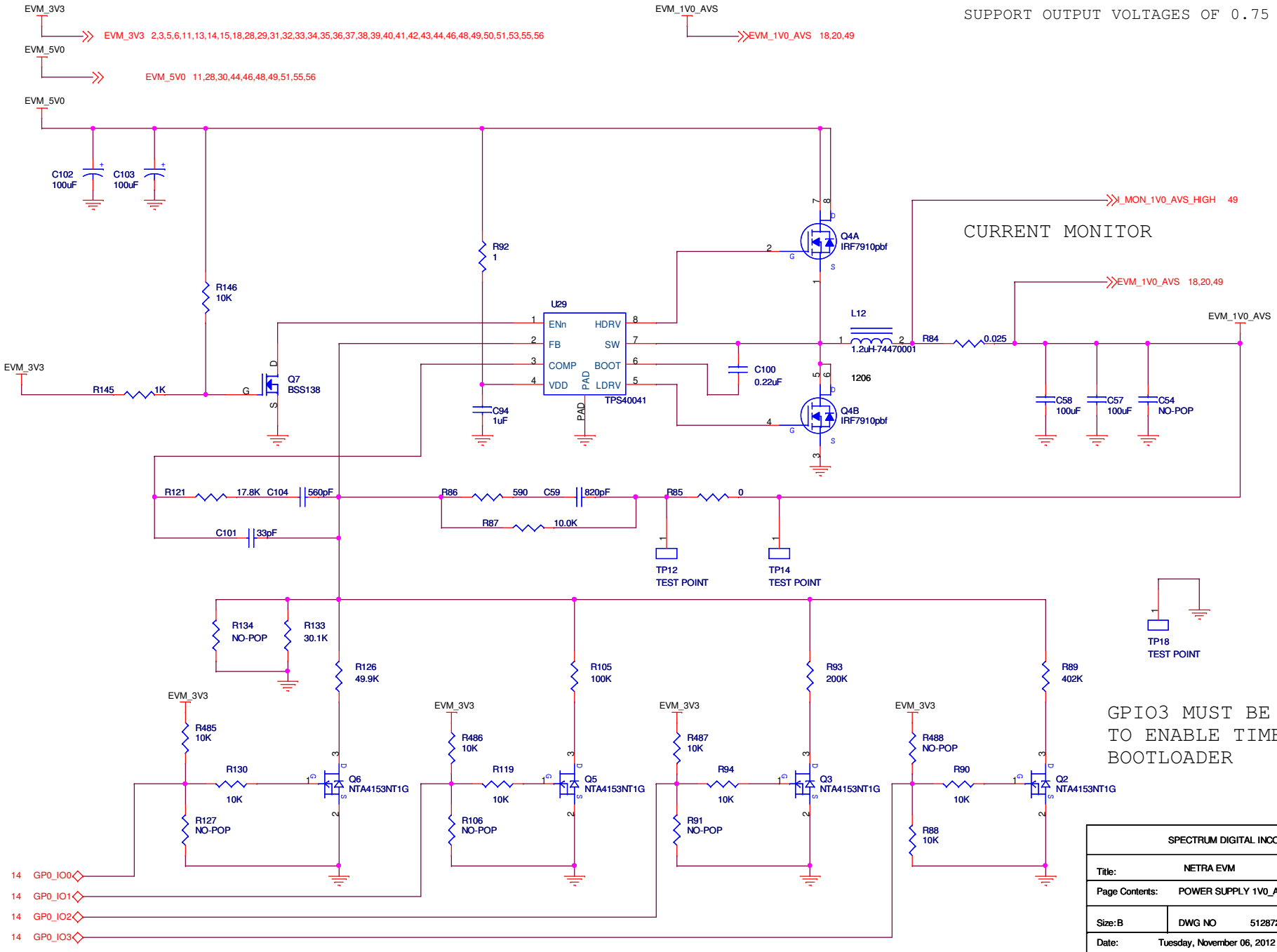

SPECTRUM DIGITAL INCORPORATED		
Title: NETRA EVM		
Page Contents: POWER SUPPLY 1V0_AVS		
Size: B	DWG NO 512872-0001	Revision: A
Date: Tuesday, November 06, 2012	Sheet 54 of 58	

CHECKED VALUES - COMPLETE for feedback

VDCDC = VFB_DCDC x ((Rtop + Rbottom)/Rbottom)
VDCDC = 0.6 x ((Rtop + Rbottom)/Rbottom)

VLDO1 = VFB_LDO x ((Rtop + Rbottom)/Rbottom)
VLDO1 = 0.5 x ((Rtop + Rbottom)/Rbottom)

VLDO2 = VFB_LDO x ((Rtop + Rbottom)/Rbottom)
VLDO2 = 0.5 x ((Rtop + Rbottom)/Rbottom)

U10 TPS65001

Pin	Name	Pin	Name
8	VINDCDC	5	PGn
10	EN_DCDC	7	SW
9	MODE	11	FB_DCDC
15	VINLDO1	14	VLDO1
3	EN_LDO1	13	FB_LDO1
18	VINLDO2	17	VLDO2
4	EN_LDO2	16	FB_LDO2
1	MRn	20	RSTn
2	TRST	6	PGND
19	RSTSNS		
12	AGND		
21	PWR_PAD		

EVM_5V0
CT1 33uF
R48 10K
TP9 NO-POP
L4 2.2uH
1V8_DIGITAL
TP8 NO-POP
C17 22pF
R36 200K 1%
C19 33uF
C18 0.1uF
R37 100K 1%
1V8_ANALOG
TP10 NO-POP
R51 261K 1%
C20 33uF
C21 0.1uF
EVM_3V3
CT2 33uF
0V9_A
TP11 NO-POP
R53 80.6K 1%
C24 33uF
C23 0.1uF
R40 100K 1%
R52 100K 1%
R54 10K
C22 0.1uF
EVM_1V0_CON
R55 10K
R484 100K
C797 .1uF
EVM_5V0
R50 100K

0V9_A
R56 0.02
EVM_0V9
EVM_0V9 5,49
CURRENT MONITOR
I_MON_0V9_HIGH 49

1V8_ANALOG
R47 0.02
EVM_1V8_A
EVM_1V8_A 9,49
CURRENT MONITOR
I_MON_1V8ANALOG_HIGH 49

1V8_DIGITAL
R32 0.02
EVM_1V8_D
EVM_1V8_D 5,15,16,49,52
CURRENT MONITOR
I_MON_1V8DIGITAL_HIGH 49

EVM_1V5
R35 4.99K
R34 10K 1%
C16 0.1uF
EVM_3V3
C462 0.1uF
EVM_3V3
R30 10K
TP7

U5 TPS3808G09DBVRG4

Pin	Name	Pin	Name
5	SENSE1	6	VDD
4	CT	1	RESET
3	MR	2	GND

Reset Threhold 0.84 Volts

EVM_5V0 11,28,30,44,46,48,49,51,54,56
EVM_1V0_CON 9,11,15,16,17,20,49,51
EVM_3V3 2,3,5,6,11,13,14,15,18,28,29,31,32,33,34,35,36,37,38,39,40,41,42,43,44,46,48,49,50,51,53,54,56
EVM_1V8_A 9,49
EVM_1V8_D 5,15,16,49,52
EVM_1V5 7,8,16,17,21,23,24,25,27,49,52,53,56

SPECTRUM DIGITAL INCORPORATED			
Title:	NETRA EVM		
Page Contents:	POWER SUPPLY 0V9/1V8_A/1V8B		
Size: B	DWG NO 512872-0001		Revision: B
Date:	Tuesday, November 06, 2012	Sheet 55 of 58	

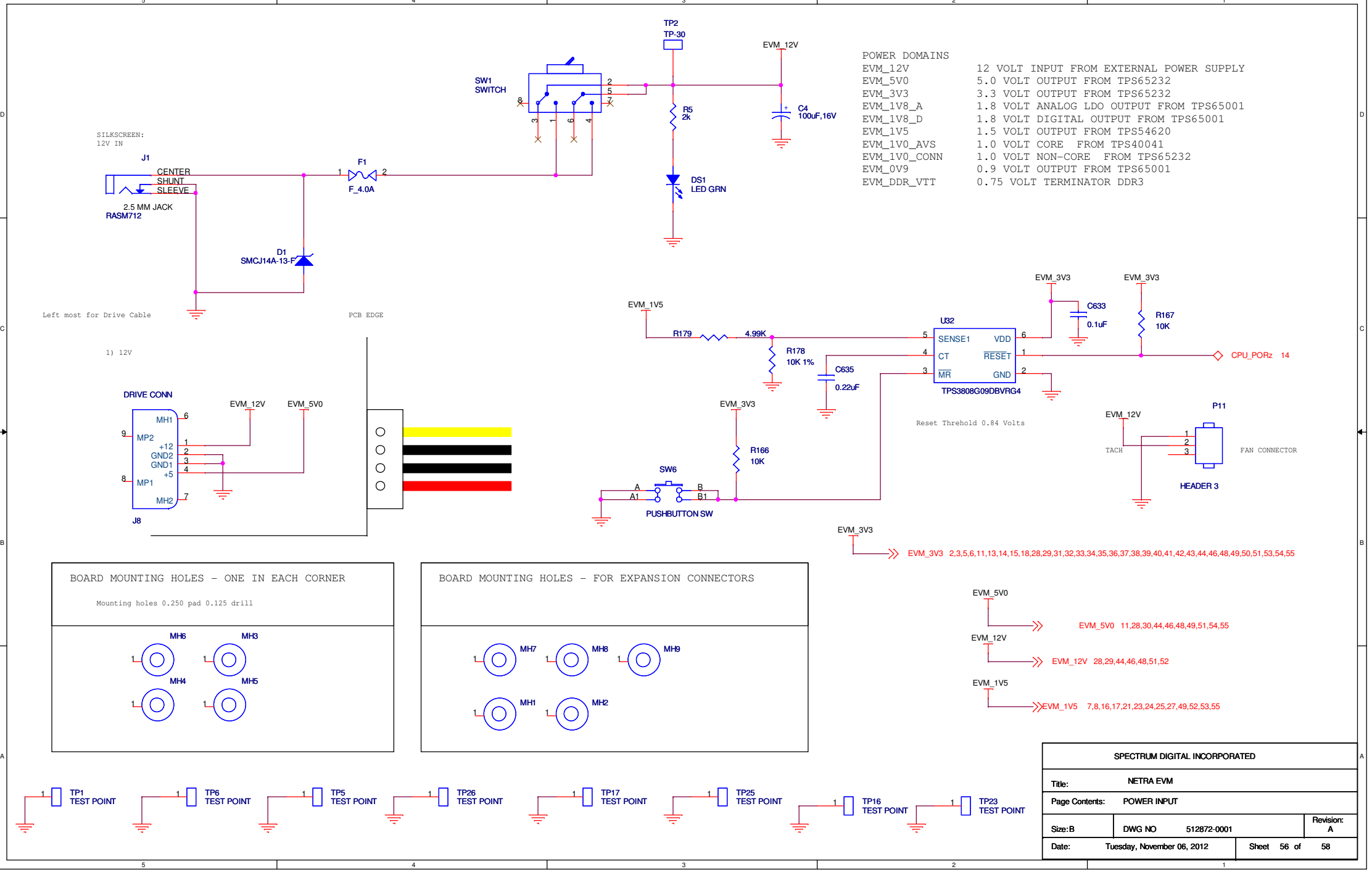
POWER DOMAINS
EVM_12V 12 VOLT INPUT FROM EXTERNAL POWER SUPPLY
EVM_5V0 5.0 VOLT OUTPUT FROM TPS65232
EVM_3V3 3.3 VOLT OUTPUT FROM TPS65232
EVM_1V8_A 1.8 VOLT ANALOG LDO OUTPUT FROM TPS65001
EVM_1V8_D 1.8 VOLT DIGITAL OUTPUT FROM TPS65001
EVM_1V5 1.5 VOLT OUTPUT FROM TPS54620
EVM_1V0_AVS 1.0 VOLT CORE FROM TPS40041
EVM_1V0_CONN 1.0 VOLT NON-CORE FROM TPS65232
EVM_0V9 0.9 VOLT OUTPUT FROM TPS65001
EVM_DDR_VTT 0.75 VOLT TERMINATOR DDR3
TP2
TP-30
EVM_12V
SW1
SWITCH
R5
2k
C4
100uF,16V
DS1
LED GRN
SILKSCREEN:
12V IN
J1
CENTER
SHUNT
SLEEVE
2.5 MM JACK
RASM712
F1
F_4.0A
D1
SMCJ14A-13-F
Left most for Drive Cable
PCB EDGE
1) 12V
DRIVE CONN
MH1
MP2
+12
GND2
GND1
+5
MP1
MH2
J8
EVM_12V
EVM_5V0
EVM_1V5
R179
4.99K
R178
10K 1%
C635
0.22uF
U32
SENSE1
CT
MR
VDD
RESET
GND
TPS3808G09DBVRG4
EVM_3V3
C633
0.1uF
R167
10K
CPU_PORz 14
Reset Threhold 0.84 Volts
EVM_3V3
R166
10K
SW6
A
A1
B
B1
PUSHBUTTON SW
EVM_12V
P11
TACH
FAN CONNECTOR
HEADER 3
EVM_3V3
EVM_3V3 2,3,5,6,11,13,14,15,18,28,29,31,32,33,34,35,36,37,38,39,40,41,42,43,44,46,48,49,50,51,53,54,55
BOARD MOUNTING HOLES - ONE IN EACH CORNER
Mounting holes 0.250 pad 0.125 drill
MH6
MH3
MH4
MH5
BOARD MOUNTING HOLES - FOR EXPANSION CONNECTORS
MH7
MH8
MH9
MH1
MH2
EVM_5V0
EVM_5V0 11,28,30,44,46,48,49,51,54,55
EVM_12V
EVM_12V 28,29,44,46,48,51,52
EVM_1V5
EVM_1V5 7,8,16,17,21,23,24,25,27,49,52,53,55
TP1
TEST POINT
TP6
TEST POINT
TP5
TEST POINT
TP26
TEST POINT
TP17
TEST POINT
TP25
TEST POINT
TP16
TEST POINT
TP23
TEST POINT
SPECTRUM DIGITAL INCORPORATED
Title: NETRA EVM
Page Contents: POWER INPUT
Size: B
DWG NO 512872-0001
Revision: A
Date: Tuesday, November 06, 2012
Sheet 56 of 58

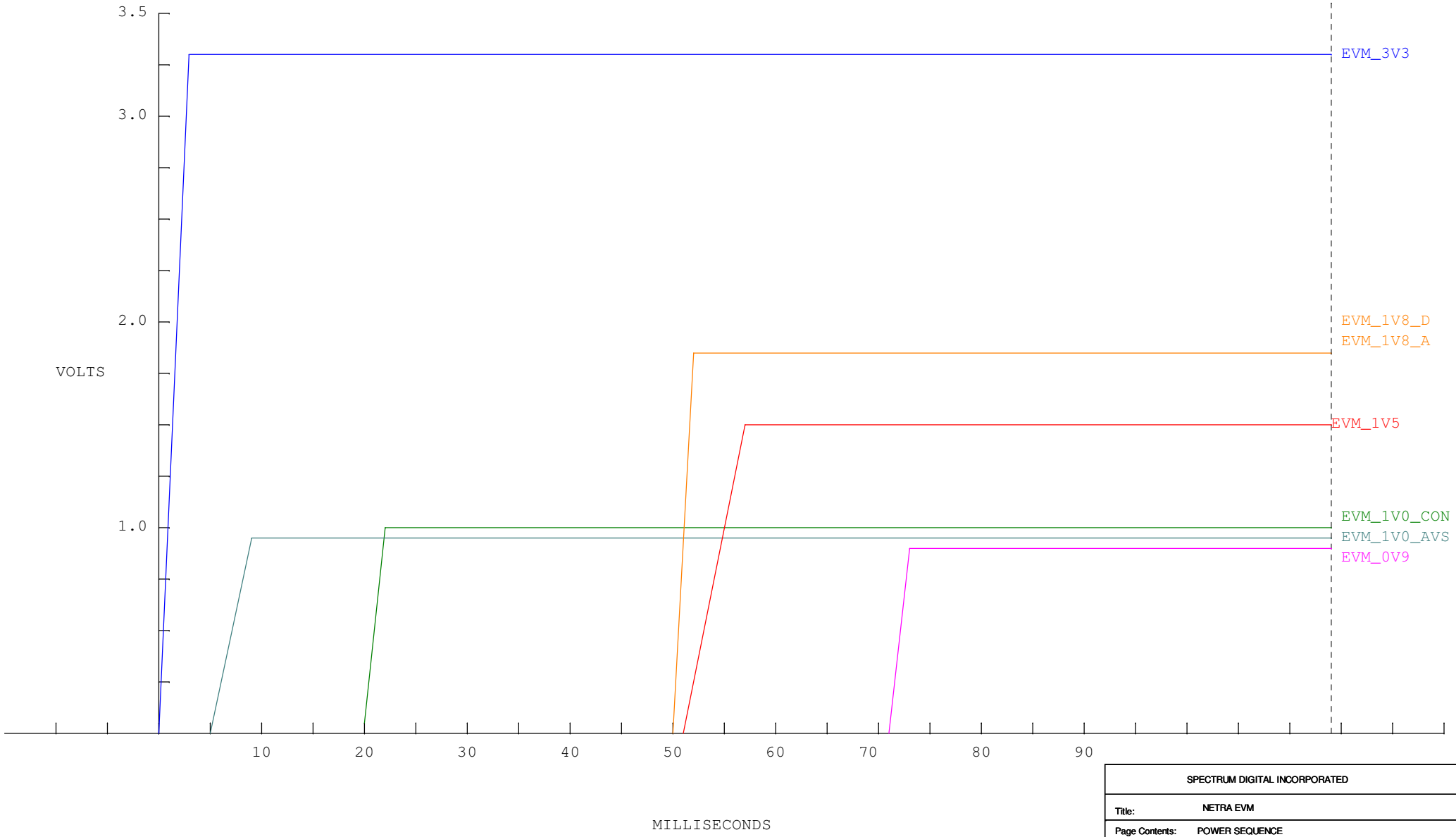

SPECTRUM DIGITAL INCORPORATED			
Title:	NETRA EVM		
Page Contents:	POWER SEQUENCE		
Size: B	DWG NO 512872-0001		Revision: B
Date:	Tuesday, November 06, 2012	Sheet 57 of 58	

REVISION A - ASSY 512870

BUILT ON PWB 512871 REVISION A
BUILT ON LOGIC 512872 REVISION A

ENGINEERING UNITS ONLY

REVISION B - ASSY 512870

BUILT ON PWB 512871 REVISION B
BUILT ON LOGIC 512872 REVISION B

UPDATED POWER SEQUENCING FROM REVISION A

REVISION C - ASSY 512870

BUILT ON PWB 512871 REVISION B
BUILT ON LOGIC 512872 REVISION B

INCREASED C635 TO .22uF FOR LONGER POWER ON RESET FIXED USB ISSUE

CHANGED R218 TO 1K TO FIX PCI RESET

REMOVED R232 AND CHANGED R74 TO 0 , TO HELP RAISE VT ENABLE VOLTAGE (STILL A BIT OUT OF SPEC, WILL FIX IN NEXT BOARD REVISION)

REVISION D - ASSY 512870

BUILT ON PWB 512871 REVISION B
BUILT ON LOGIC 512872 REVISION B

CHANGED AVS CIRCUITRY AND CPU HAS AVS ENABLED

REVISION E - ASSY 512870

BUILT ON PWB 512871 REVISION C
BUILT ON LOGIC 512872 REVISION C

UPDATED CAPS AROUND TPS65232 TO HELP WITH OVERVOLTAGE ON SWITCH OUTPUTS OF THE PART LAYOUT IMPROVEMENT
UPDATED VTT ENABLE TO RAISE ENABLE VOLTAGE PAST 1.7V MIN

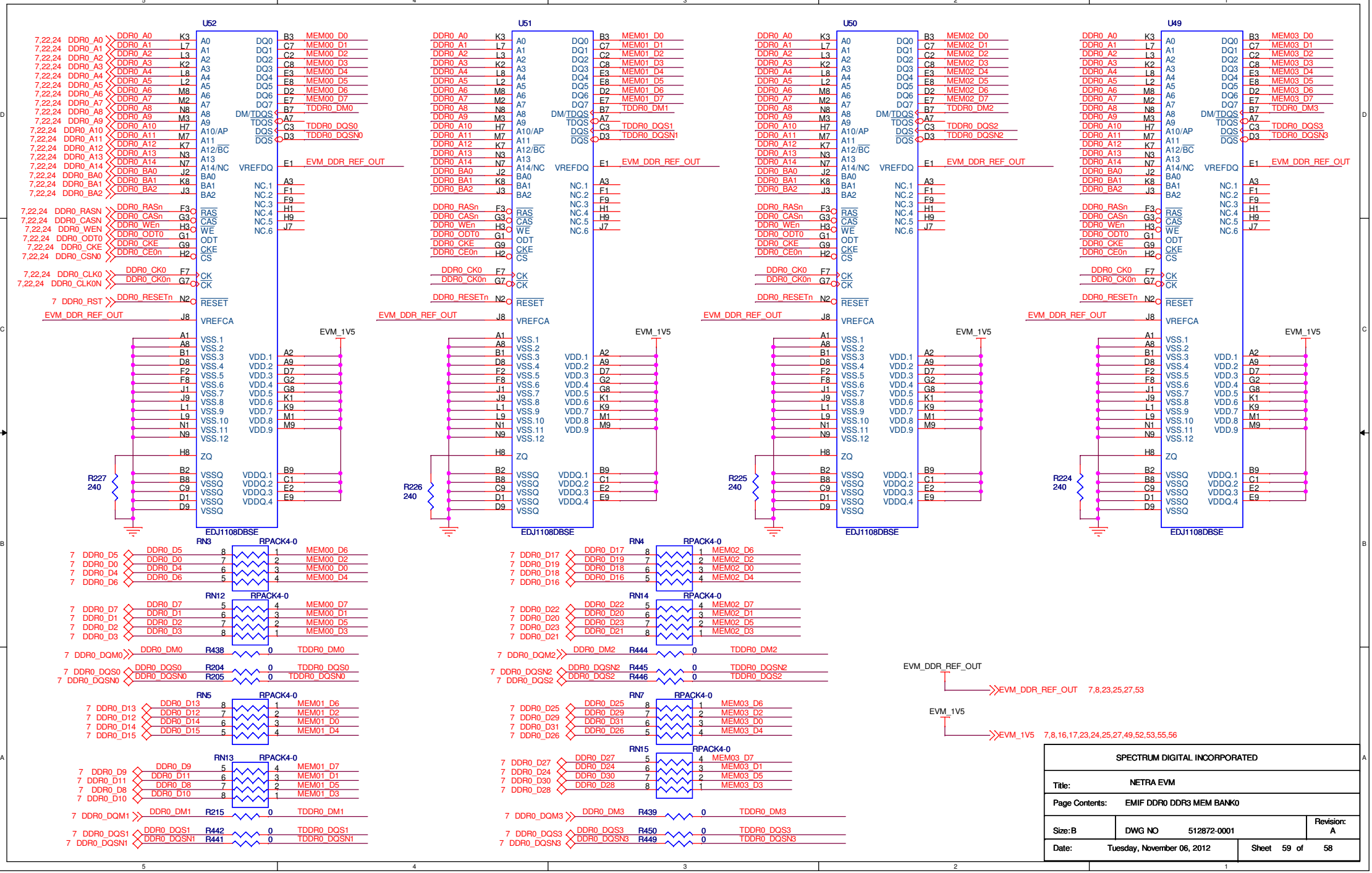
U52
U51
U50
U49
EDJ1108DBSE
EVM_DDR_REF_OUT
EVM_1V5
R227 240
R226 240
R225 240
R224 240
RN3 RPACK4-0
RN12 RPACK4-0
RN5 RPACK4-0
RN13 RPACK4-0
RN4 RPACK4-0
RN14 RPACK4-0
RN7 RPACK4-0
RN15 RPACK4-0
R438 0 TDDR0_DM0
R204 0 TDDR0_DQS0
R205 0 TDDR0_DQSN0
R215 0 TDDR0_DM1
R442 0 TDDR0_DQS1
R441 0 TDDR0_DQSN1
R444 0 TDDR0_DM2
R445 0 TDDR0_DQSN2
R446 0 TDDR0_DQS2
R439 0 TDDR0_DM3
R450 0 TDDR0_DQS3
R449 0 TDDR0_DQSN3
EVM_DDR_REF_OUT 7,8,23,25,27,53
EVM_1V5 7,8,16,17,23,24,25,27,49,52,53,55,56
SPECTRUM DIGITAL INCORPORATED
Title: NETRA EVM
Page Contents: EMIF DDR0 DDR3 MEM BANK0
Size: B
DWG NO 512872-0001
Revision: A
Date: Tuesday, November 06, 2012
Sheet 59 of 58